AVENTO VANITY WASHBASIN RECTANGLE

PRODUCT INFORMATION

Article title	Villeroy & Boch Avento Vanity washbasin, 1000 x 470 x 165 mm, White Alpin, with overflow
Article number	4156A501
Assembly / Assembly type	wall-mounted
Scope of delivery	1 x vanity washbasin
Depth in mm	470
Width in mm	1000
Height in mm	165
Interior depth	110
Collection	Avento
Suitable for	3-hole mixer, Matching Villeroy&Boch furniture
Material	Sanitary ceramics
surface	glossy
Colour name	White Alpin
With overflow	Yes
Shape	Rectangle
Colour designation	White Alpin
Antibacterial surface (with AntiBac)	No
Easy surface cleaning (CeramicPlus)	No
Number of tap holes punched through	1
Number of tap holes pre-drilled	2
Number of bowls	1

TECHNICAL DRAWINGS

4156A501

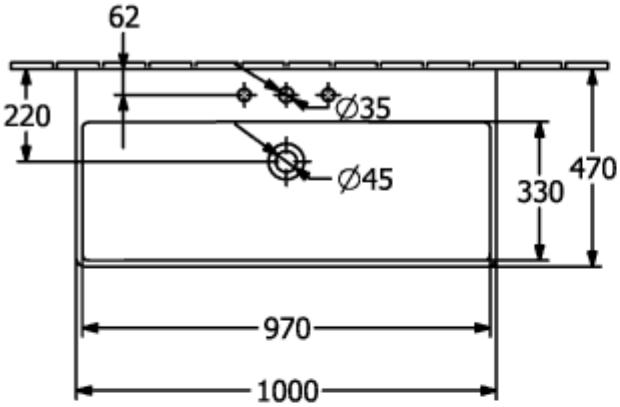

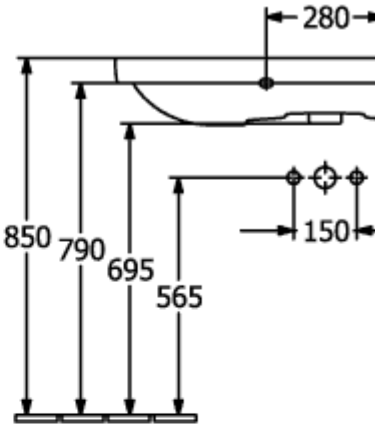

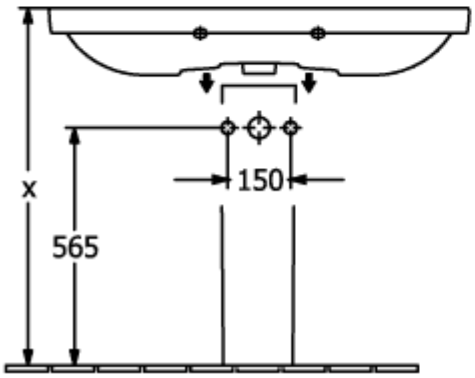

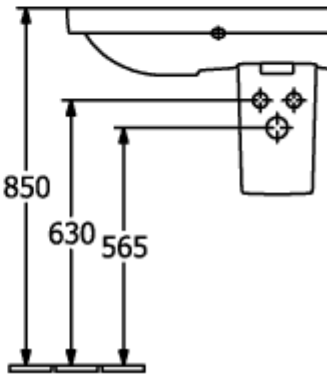

4156A501

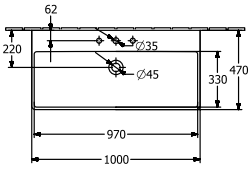

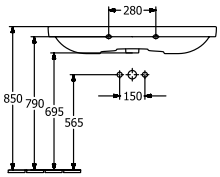

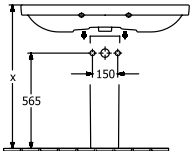

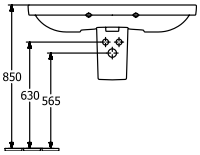

4156A501

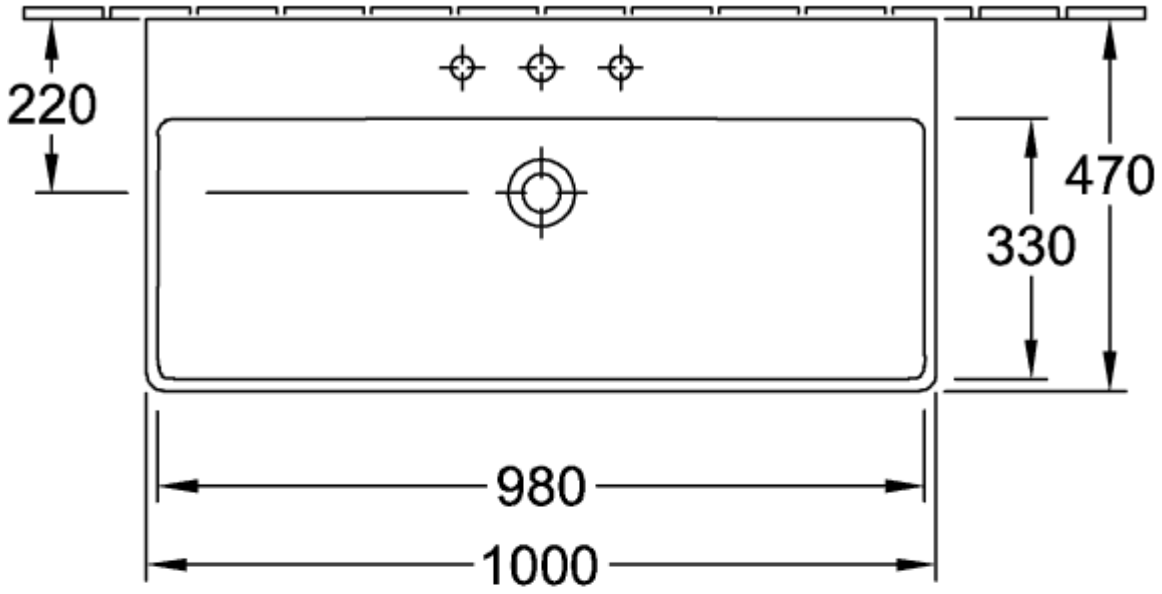

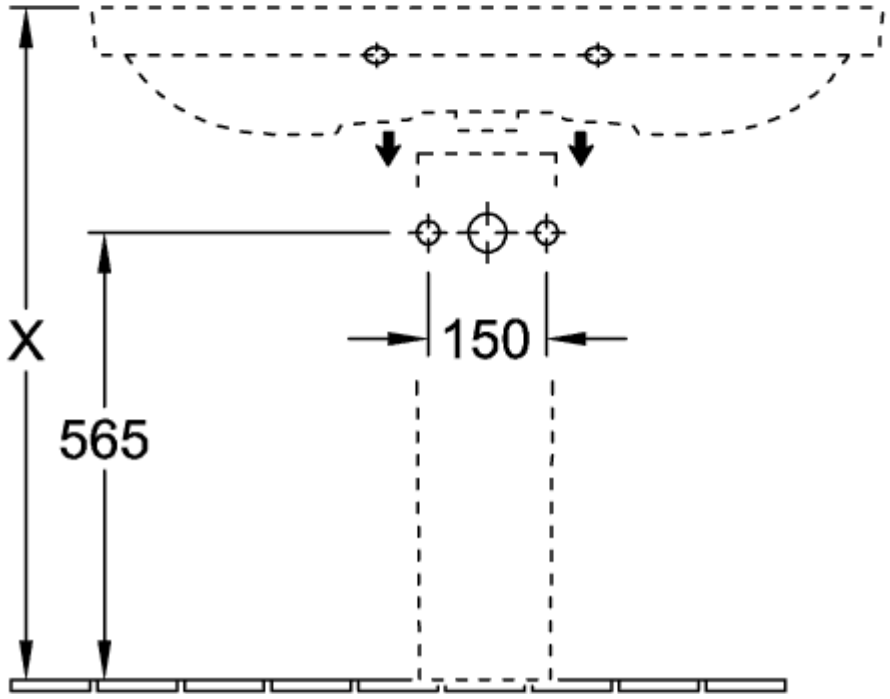

4156A501

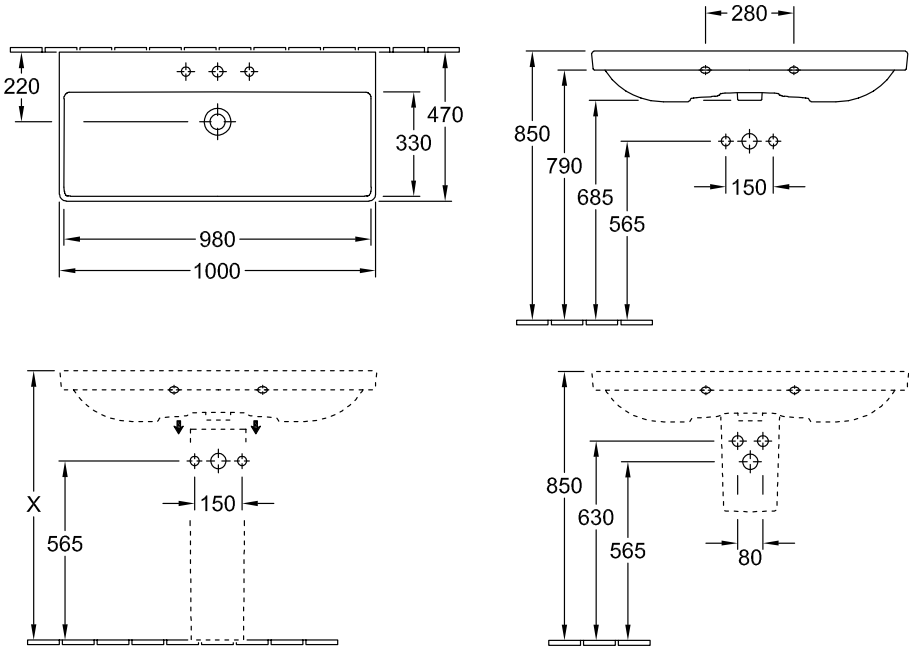
220
470
330
980
1000
280
850
790
685
565
150
X
565
150
850
630
565
80