VENTICELLO WASHDOWN TOILET, RIMLESS RECTANGLE

PRODUCT INFORMATION

Article title	Villeroy & Boch Venticello Washdown toilet, rimless, wall-mounted, Stone White CeramicPlus
Article number	4611R0RW
Assembly / Assembly type	wall-mounted
Assembly instructions	not suitable for installation with flush valves
Scope of delivery	1 x washdown toilet, rimless , 1 x fastening set
Depth in mm	560
Width in mm	375
Height in mm	340
Collection	Venticello
Suitable for	Concealed cistern
Innovative flushing technology (with TwistFlush)	No
Flush volume l	3 / 4,5 l
Wall-mounted - floor-standing	wall-mounted
Material	Sanitary ceramics
surface	matt
Colour name	Stone White CeramicPlus
Shape	Rectangle
Colour designation	Stone White
Antibacterial surface (with AntiBac)	No
Easy surface cleaning (CeramicPlus)	Yes
Rimless (mit DirectFlush)	Yes
Flush type	Washdown toilet
Integrated freshness solution (with ViFresh)	No
Outlet / outlet	horizontal outlet

TECHNICAL DRAWINGS

4611R0RW

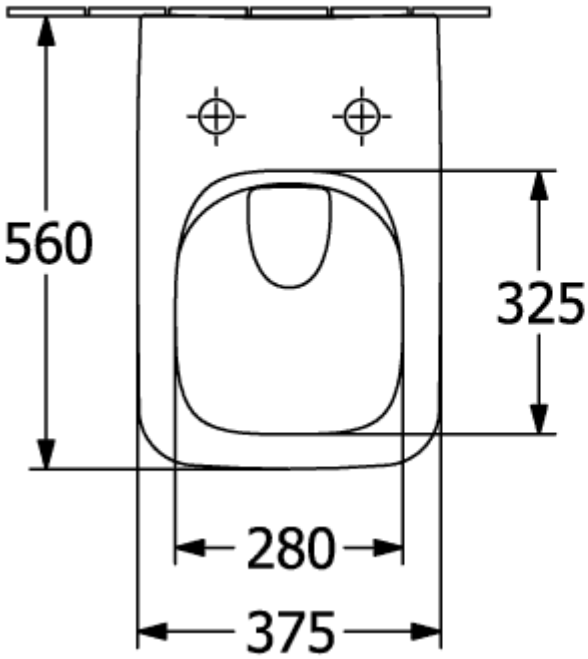

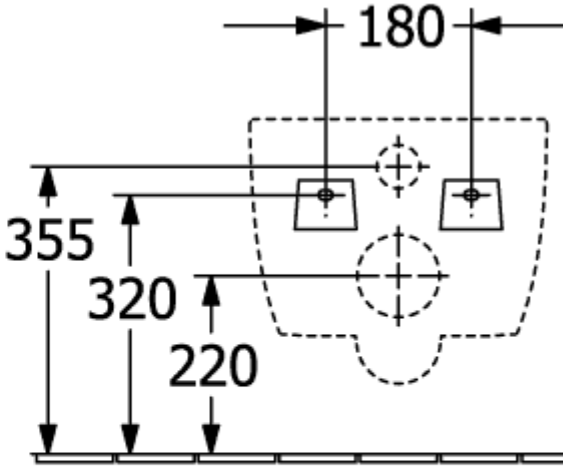
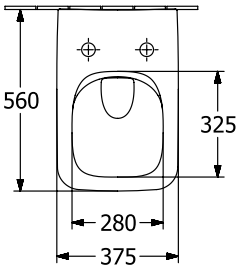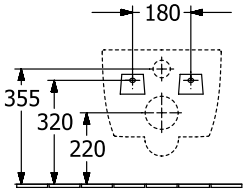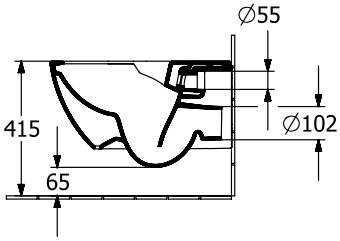
4611R0RW