LOOP & FRIENDS SURFACE-MOUNTED WASHBASIN RECTANGLE

PRODUCT INFORMATION

Article title	Villeroy & Boch Loop & Friends Surface-mounted washbasin, 585 x 380 x 110 mm, White Alpin, with overflow
Article number	51540001
Assembly / Assembly type	Surface-mounted
Scope of delivery	1 x surface-mounted washbasin , 1 x extended ball rod to operate pop-up outlet valve 1 x outlet valve with ceramic valve cover 1 x fastening set 1 x cut-out template
Depth in mm	380
Width in mm	585
Height in mm	110
Interior depth	85
Collection	Loop & Friends
Suitable for	Wall-mounted tap fittings, Matching Villeroy&Boch furniture|Tap fitting with raised base
Material	Sanitary ceramics
surface	glossy
Colour name	White Alpin
With overflow	Yes
Shape	Rectangle
Colour designation	White Alpin
Antibacterial surface (with AntiBac)	No
Easy surface cleaning (CeramicPlus)	No
Underside of washbasin	unground
Number of bowls	1

TECHNICAL DRAWINGS

51540001

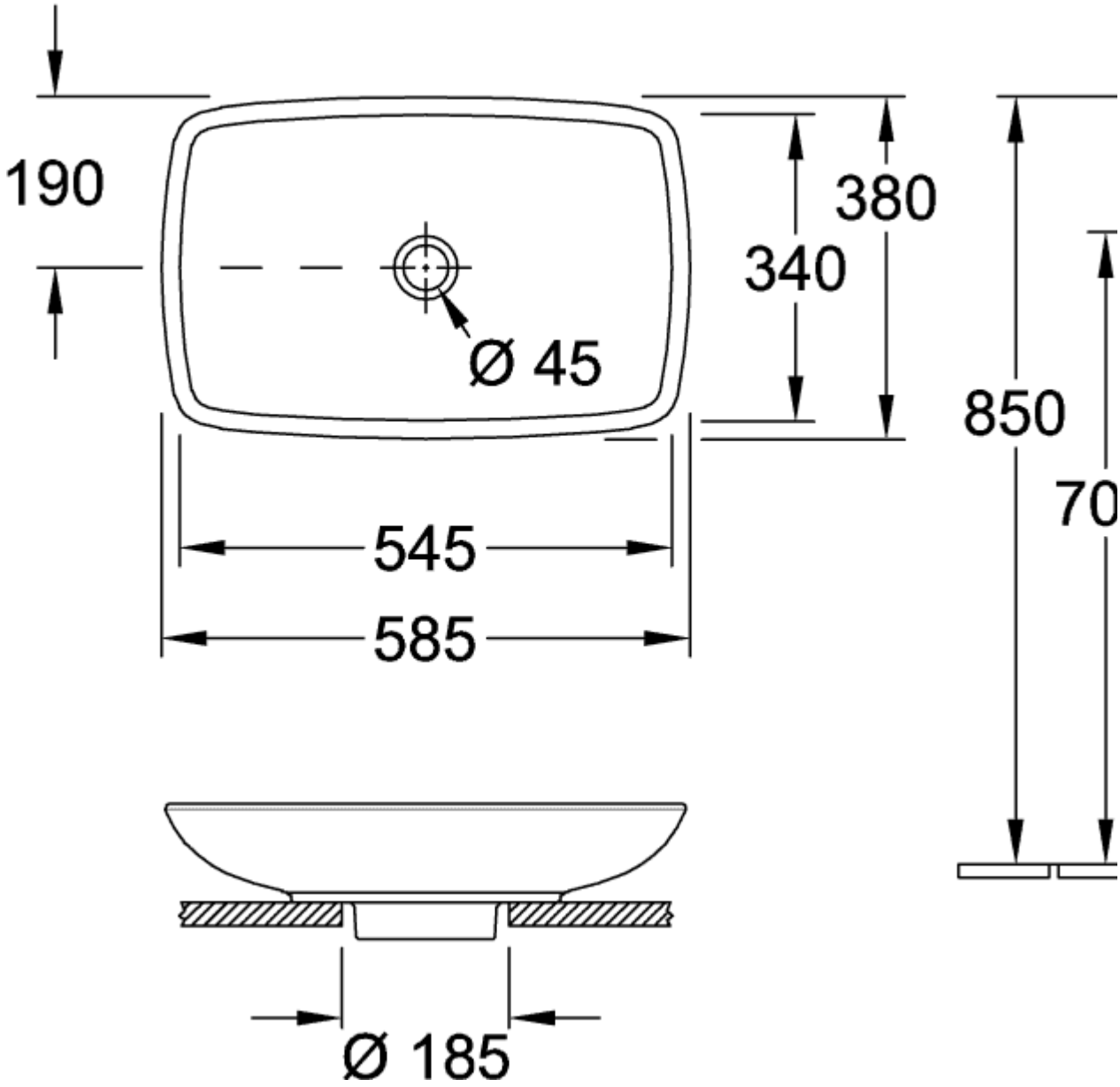
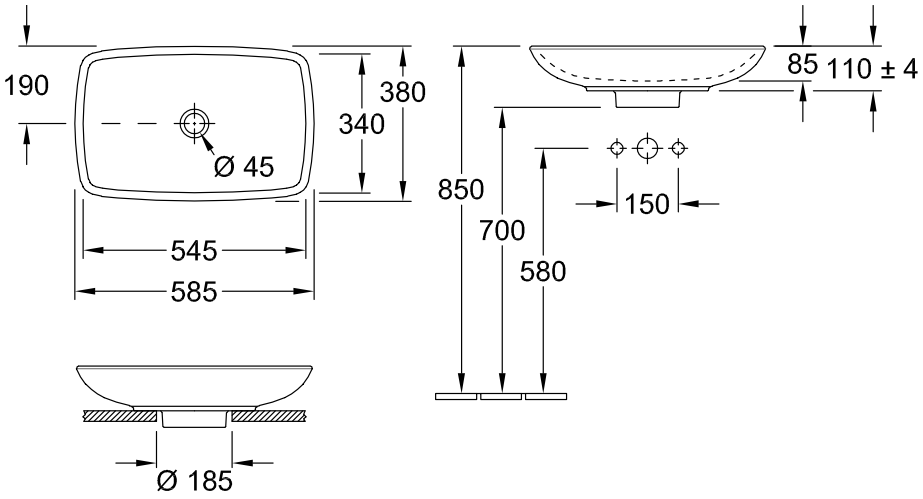
51540001