# O.NOVO CISTERN

## PRODUCT INFORMATION

| | |
|---|---|
| Article title | Villeroy & Boch O.novo Cistern, water inlet from the sides, reversible, White Alpin |
| Article number | 5760S101 |
| Scope of delivery | 1 x cistern , 1 x fastening set |
| Depth in mm | 165 |
| Width in mm | 385 |
| Height in mm | 360 |
| Collection | O.novo |
| Material | Sanitary ceramics |
| Colour name | White Alpin |
| Other material | Push button: ABS Flushing mechanism: Plastic |
| Other surfaces | Push button: chrome, glossy, Flushing mechanism: glossy |
| Colour designation | White Alpin |
| Other colour designations | Push button: Chrome, Flushing mechanism: White Alpin |

## TECHNICAL DRAWINGS

**5760S101**

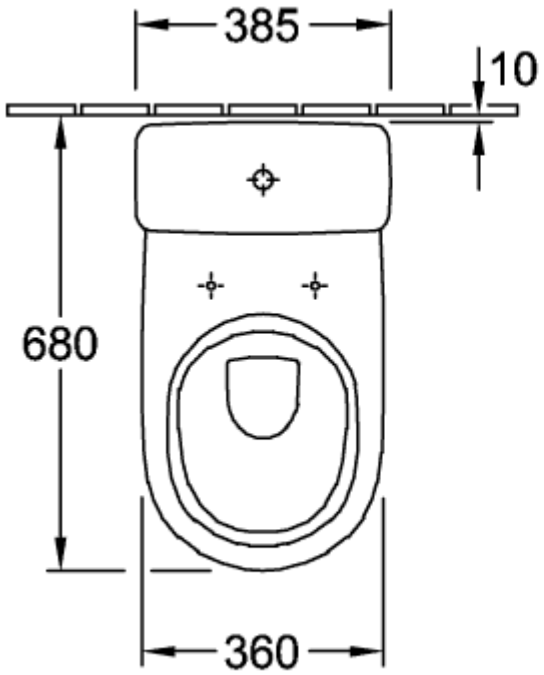


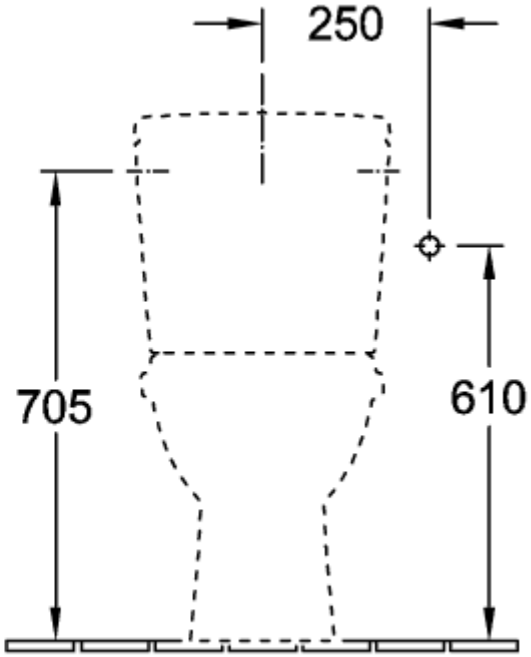


**5760S101**

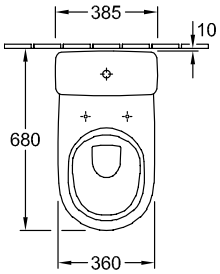


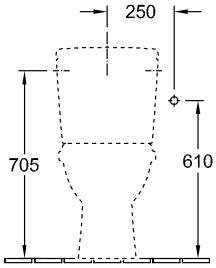


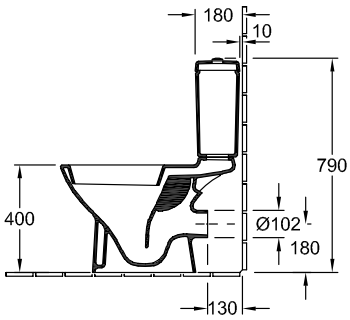

**5760S101**

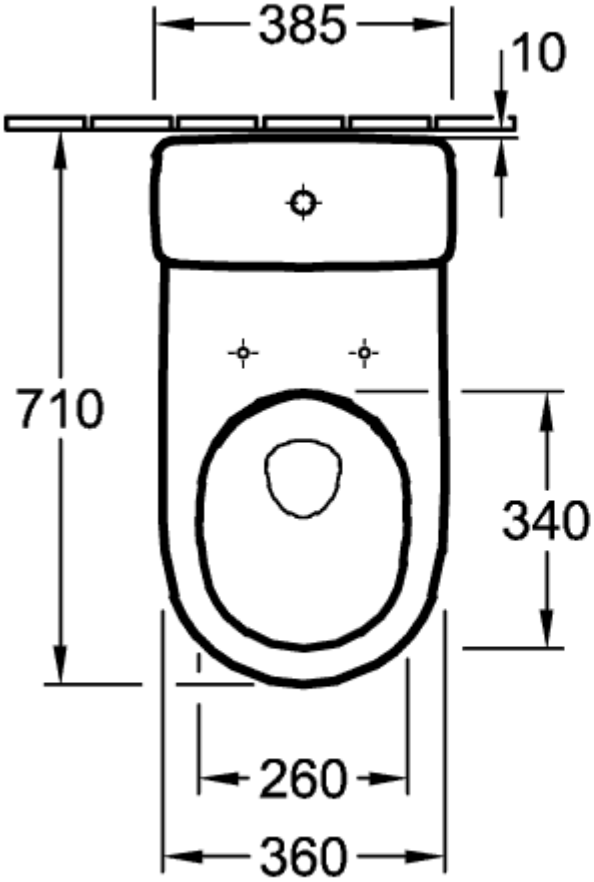
385
10
710
340
260
360

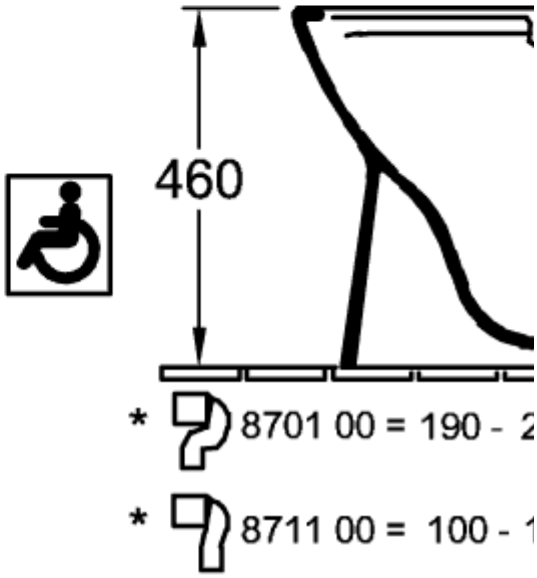
460
* 8701 00 = 190 - 2
* 8711 00 = 100 - 1

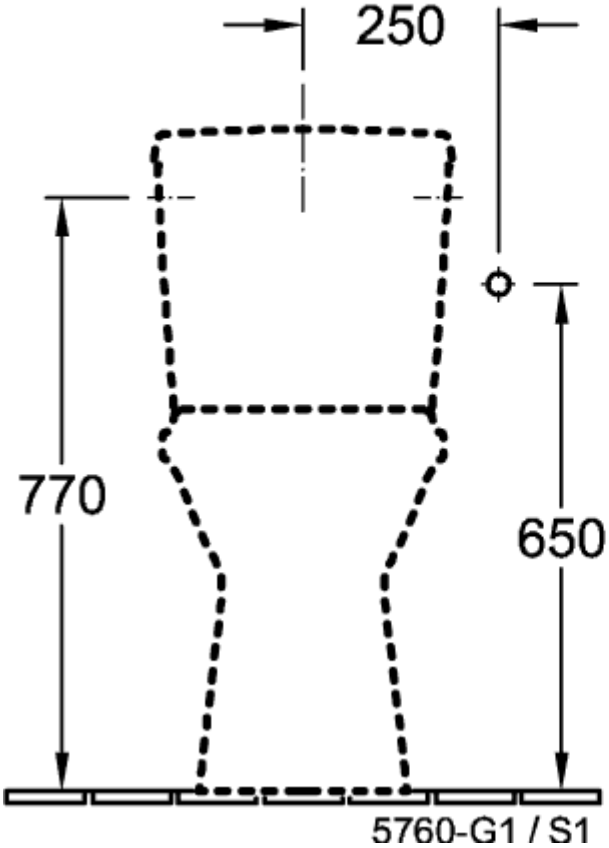
250
770
650
5760-G1 / S1

## 5760S101

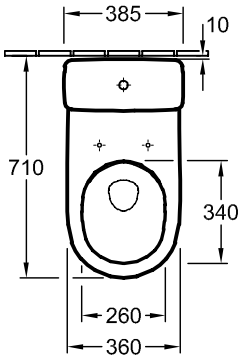
385
10
710
340
260
360

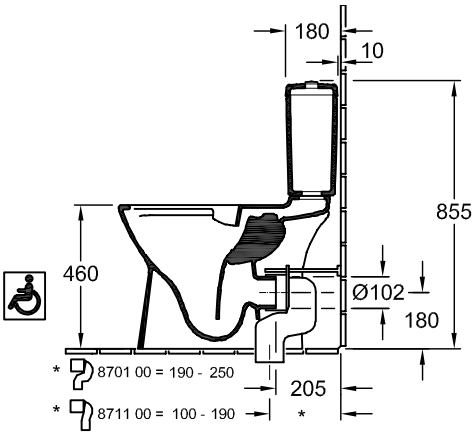
180
10
855
460
Ø102
180
205
* 8701 00 = 190 - 250
* 8711 00 = 100 - 190
*

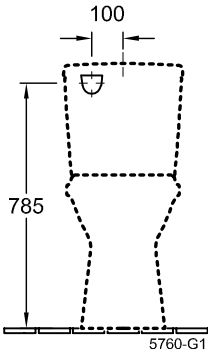
100
785
5760-G1

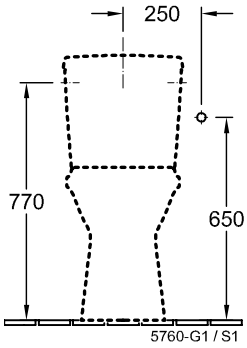
250
770
650
5760-G1 / S1

**5760S101**

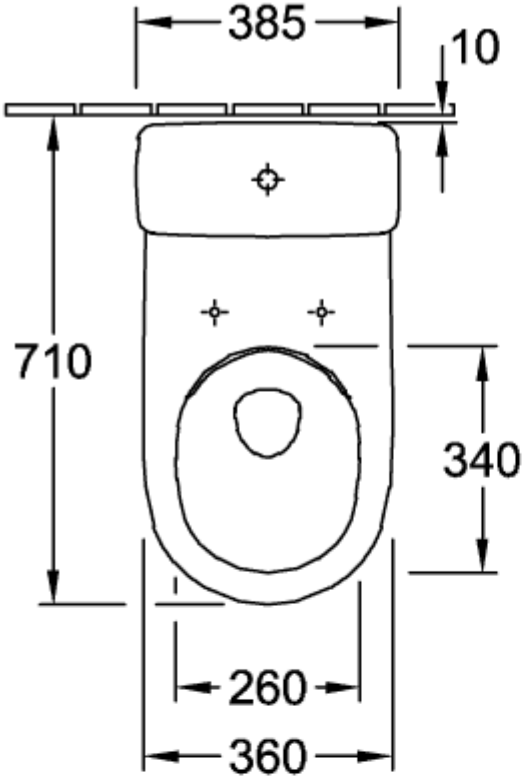
385
10
710
340
260
360

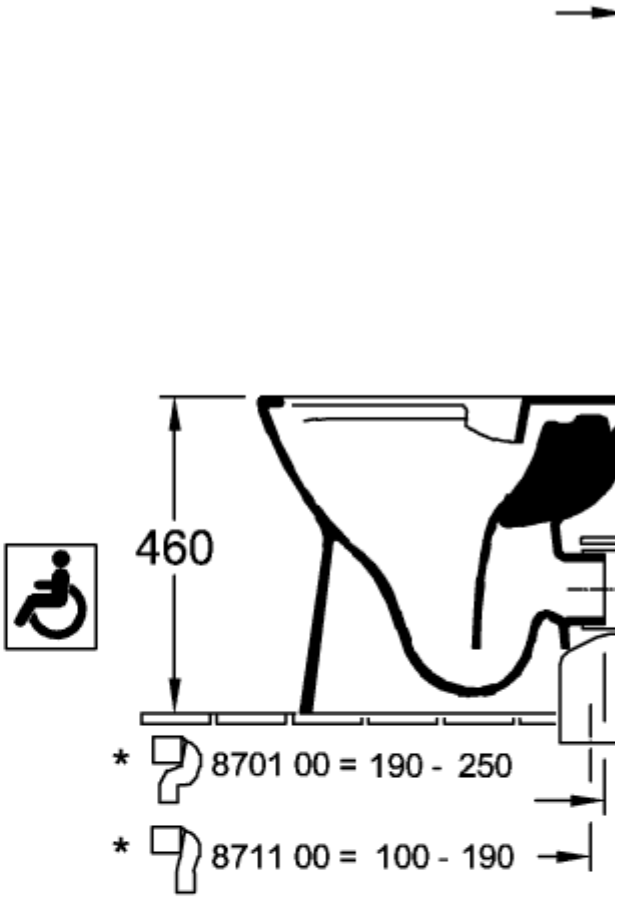
460
* 8701 00 = 190 - 250
* 8711 00 = 100 - 190

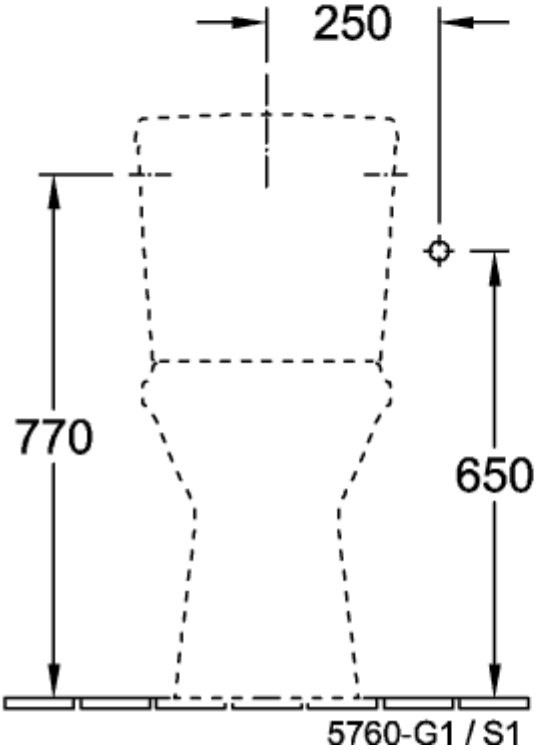
250
770
650
5760-G1 / S1

## 5760S101

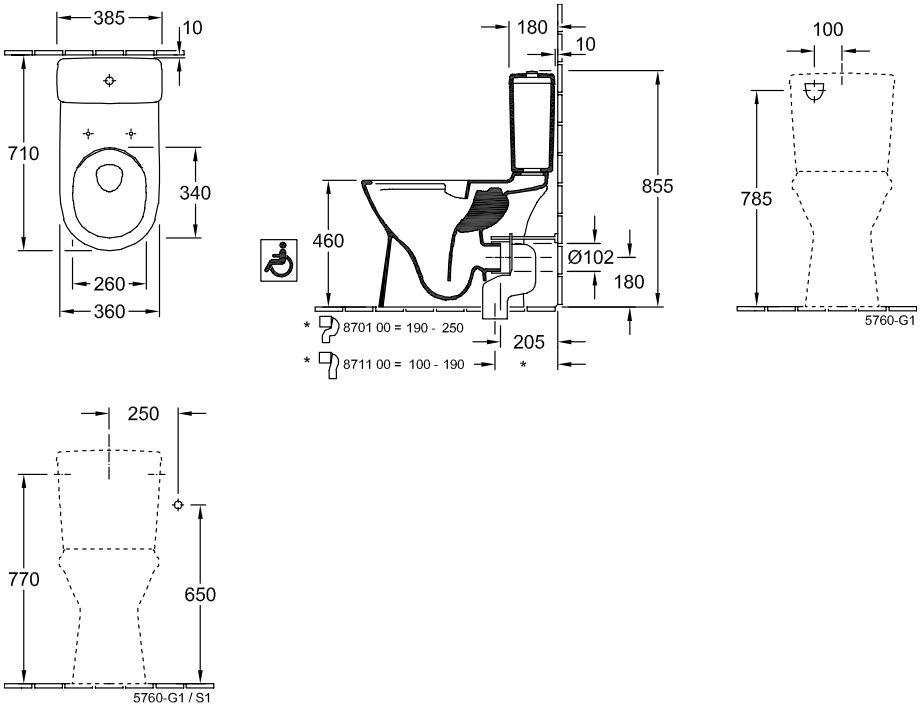
385
10
710
340
260
360
180
10
855
460
Ø102
180
205
* 8701 00 = 190 - 250
* 8711 00 = 100 - 190
*
100
785
5760-G1
250
770
650
5760-G1 / S1

**5760S101**

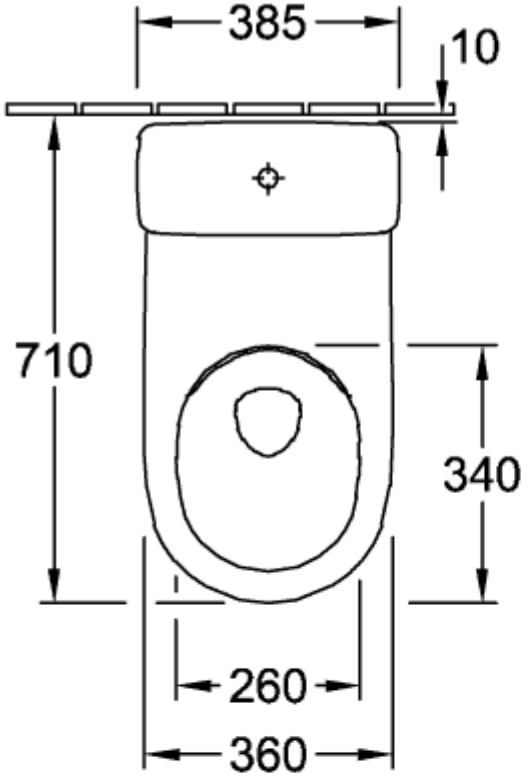
385
10
710
340
260
360

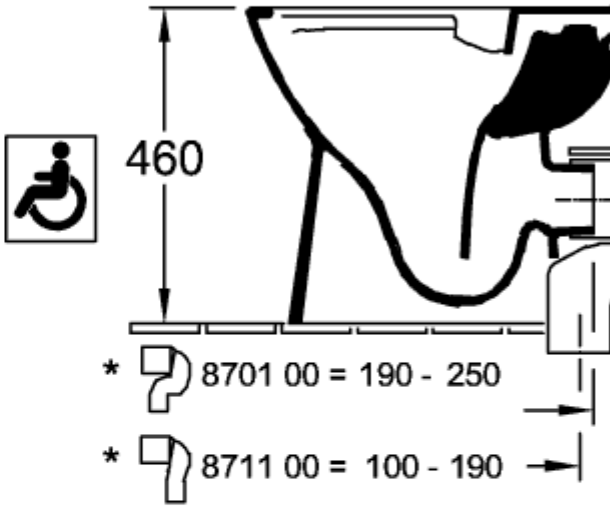
460
* 8701 00 = 190 - 250
* 8711 00 = 100 - 190

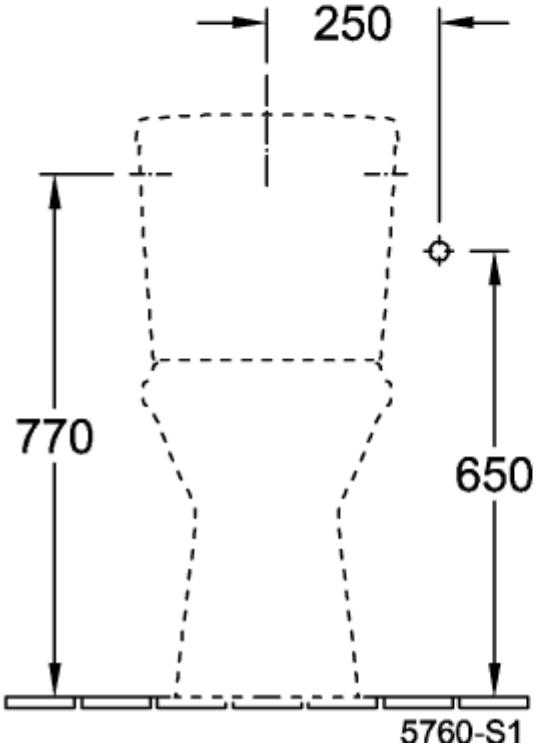
250
770
650
5760-S1

## 5760S101

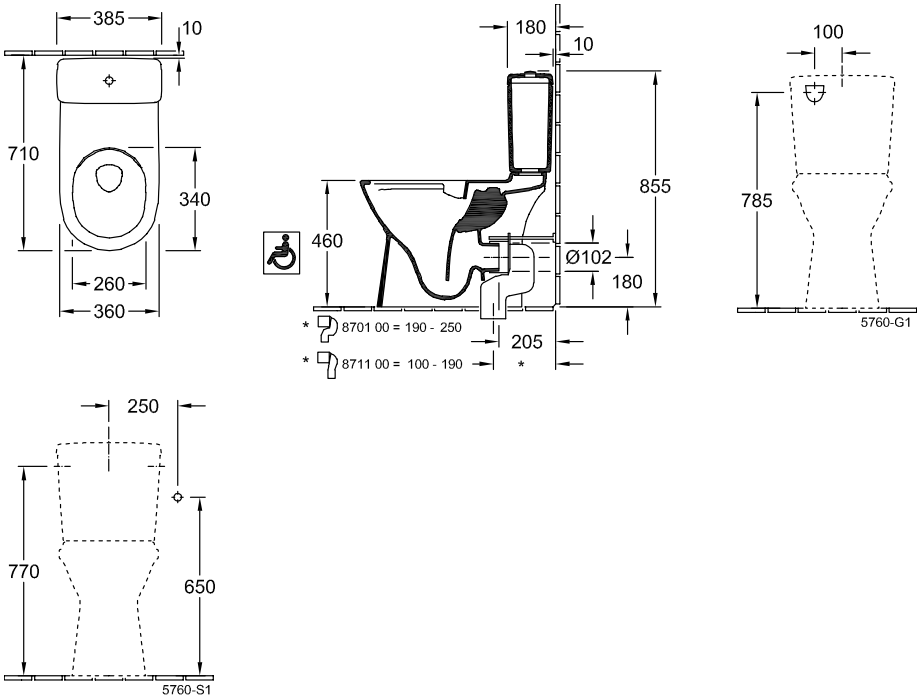


## 5760S101

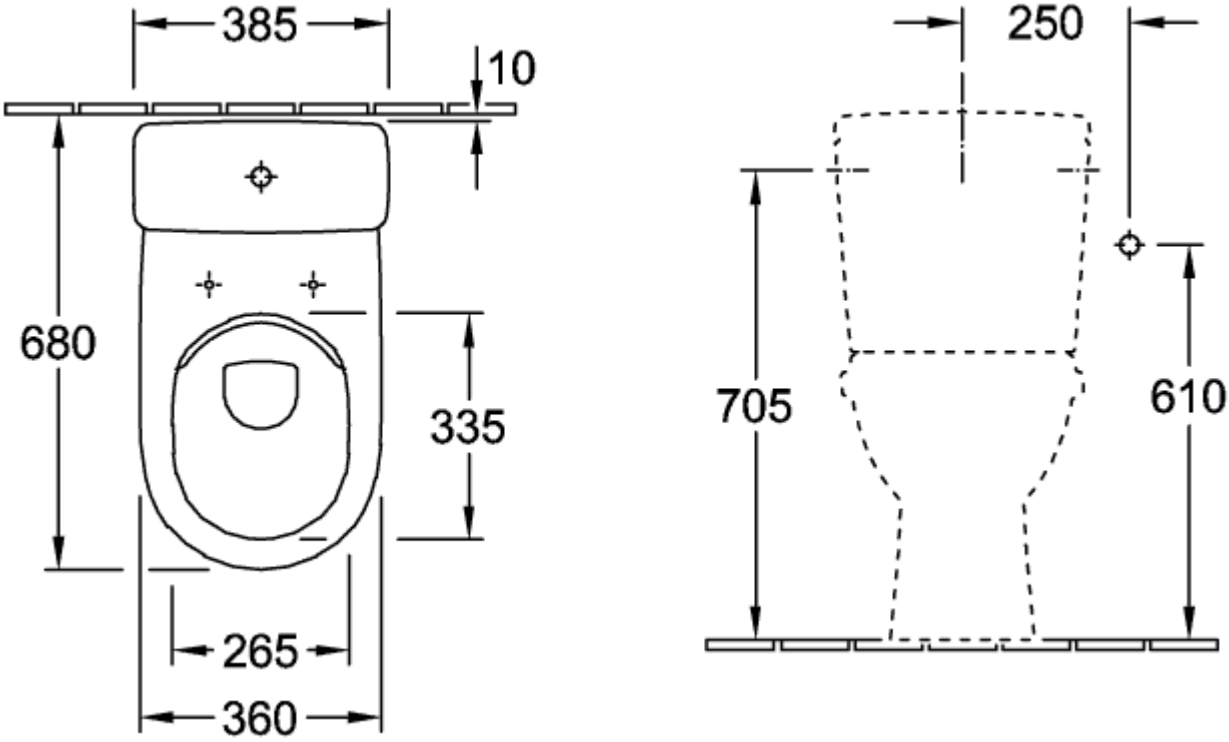

**5760S101**

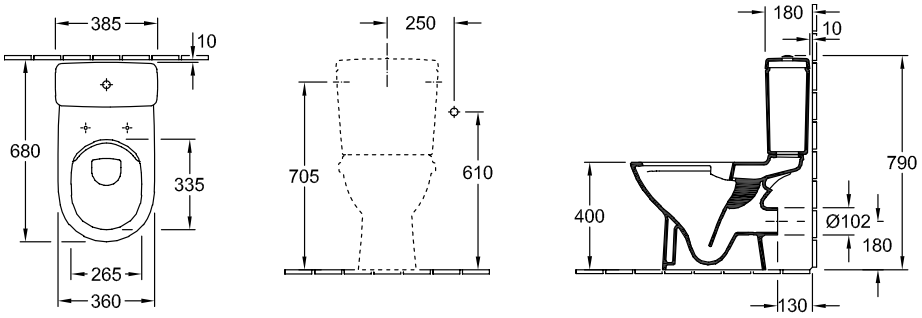


**5760S101**

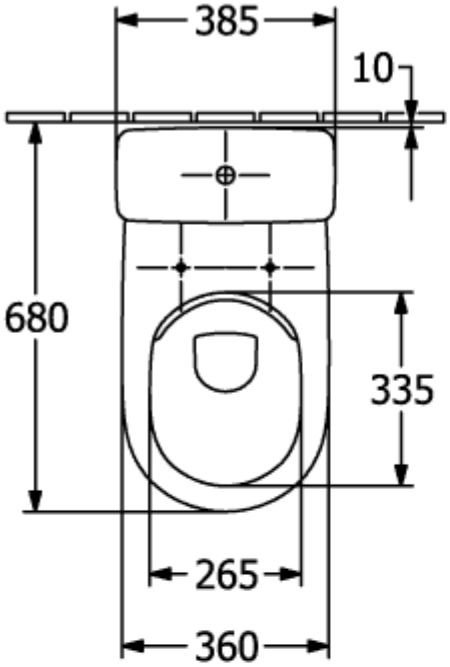


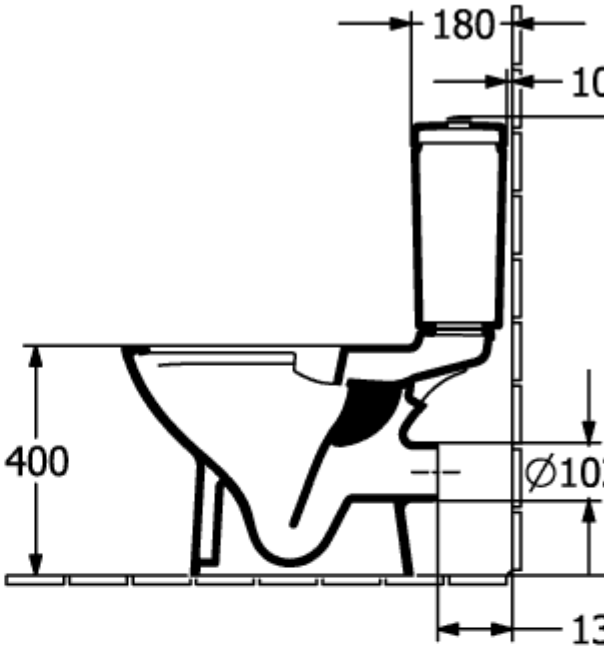


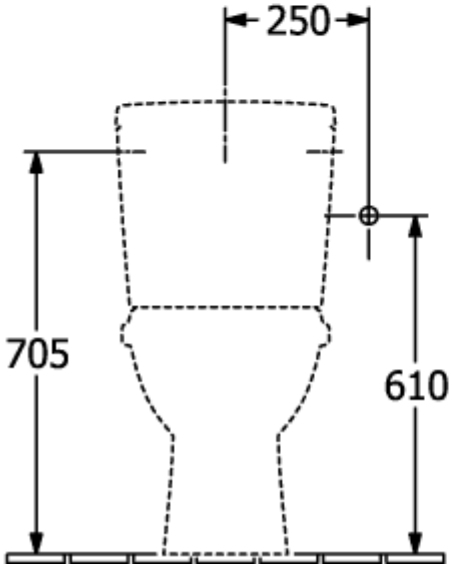

## 5760S101

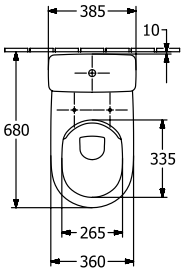


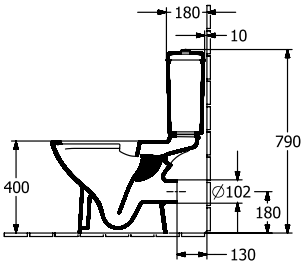


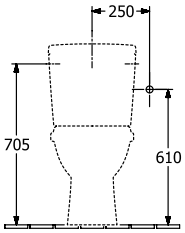


## 5760S101

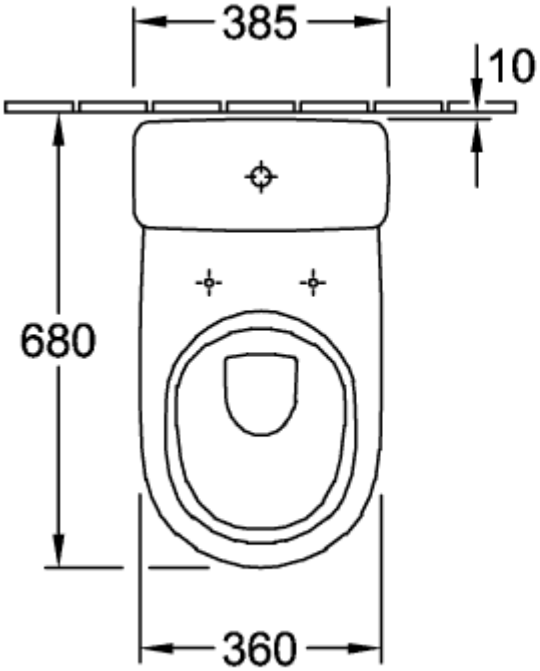


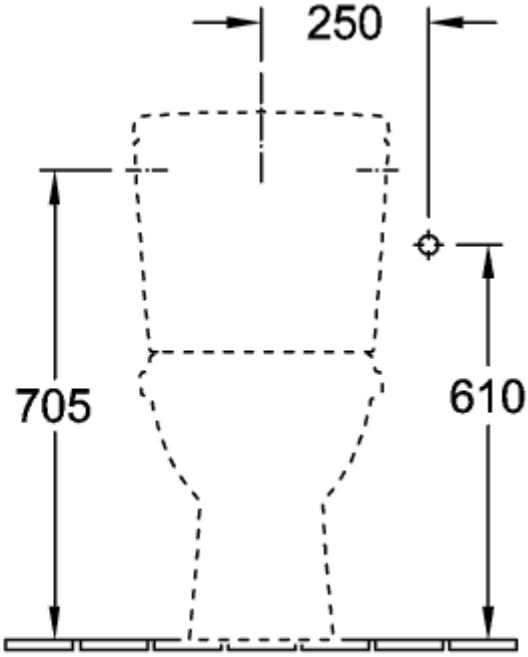


## 5760S101

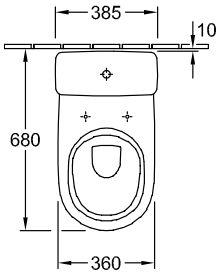


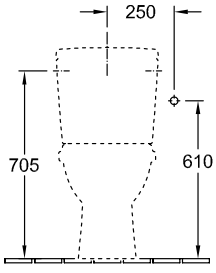


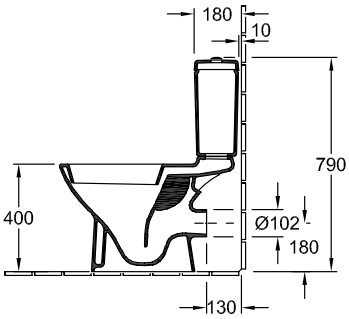

## 5760S101

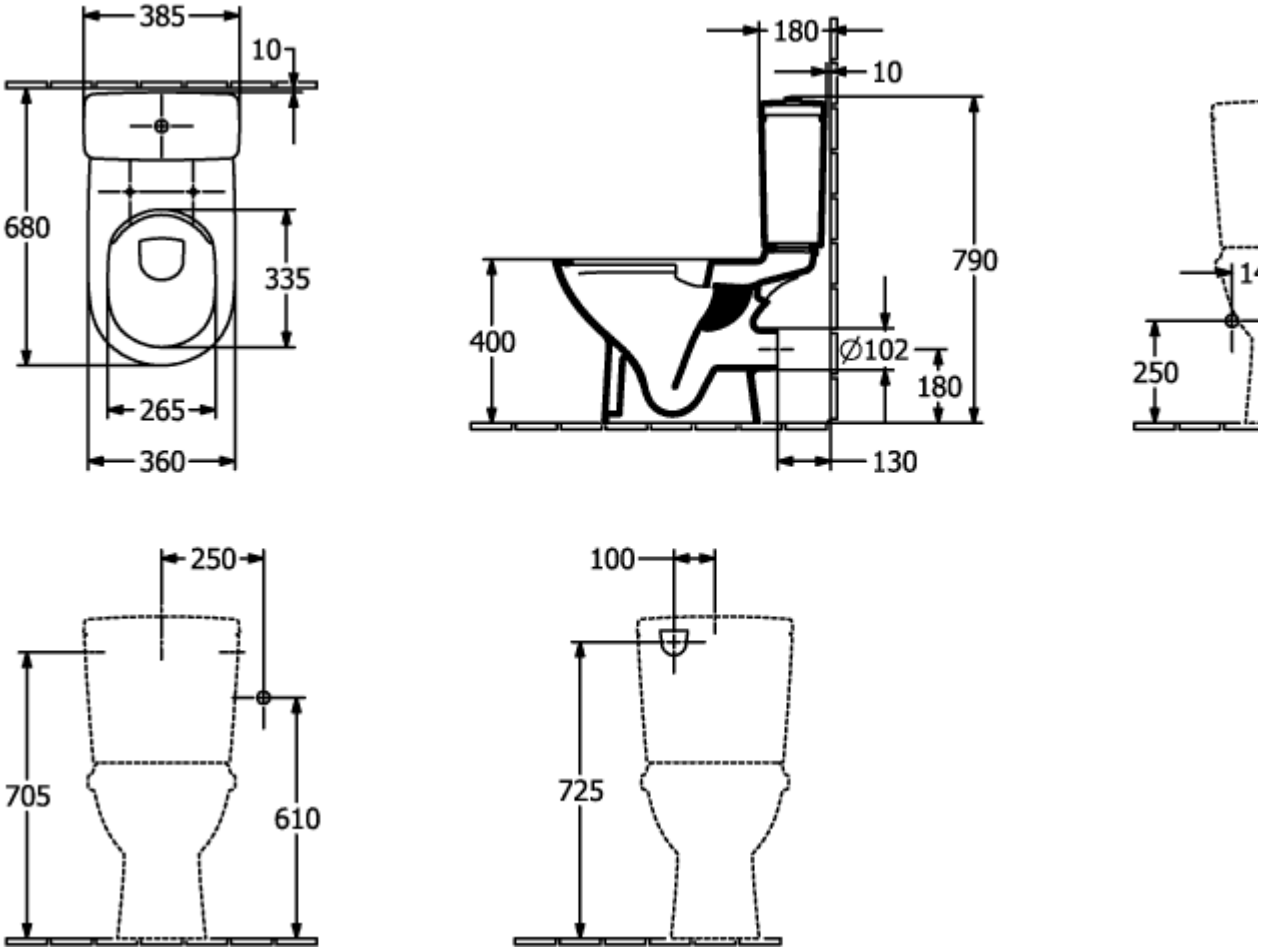

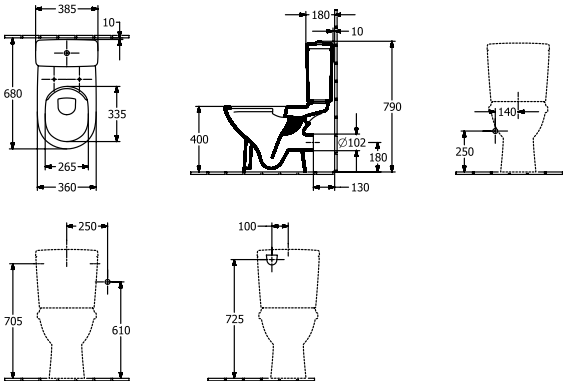
## 5760S101