LOOP & FRIENDS BUILT-IN WASHBASIN ROUND

PRODUCT INFORMATION

Article title	Villeroy & Boch Loop & Friends Built-in washbasin, 450 x 450 x 205 mm, White Alpin, with overflow, unground
Article number	61404501
Assembly / Assembly type	built-in installation
Scope of delivery	1 x built-in washbasin , 1 x extended ball rod to operate pop-up outlet valve 1 x cut-out template
Depth in mm	450
Width in mm	450
Height in mm	205
Interior depth	160
Diameter in mm	450
Collection	Loop & Friends
Material	Sanitary ceramics
surface	glossy
Colour name	White Alpin
With overflow	Yes
Shape	Round
Colour designation	White Alpin
Antibacterial surface (with AntiBac)	No
Easy surface cleaning (CeramicPlus)	No
Underside of washbasin	unground
Number of bowls	1

TECHNICAL DRAWINGS

61404501

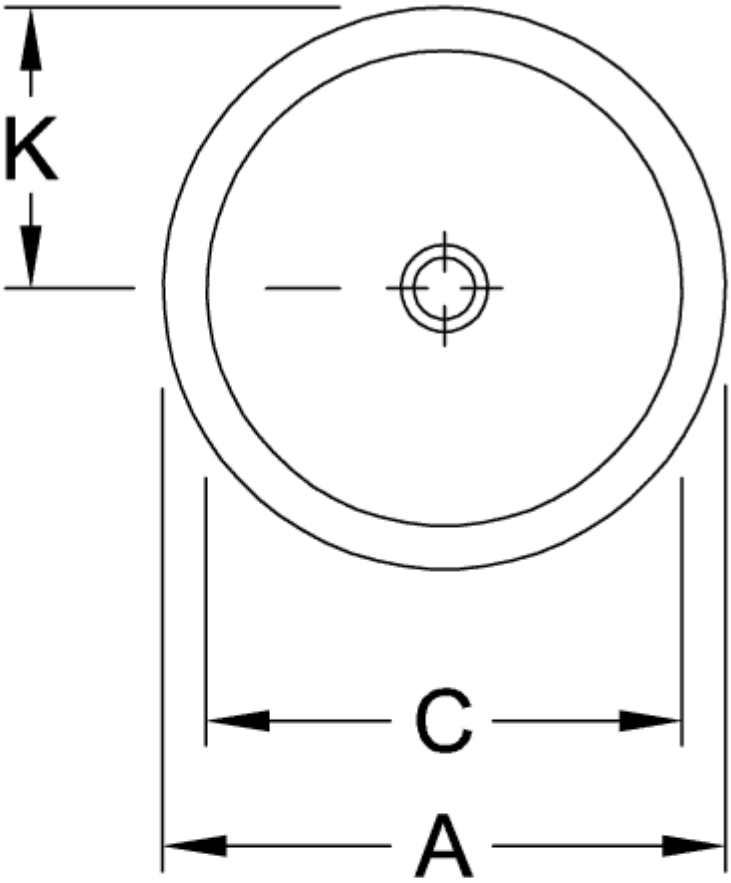

	A	C	G	K	R
6140 51	535	440	630	267	510
6141 51	535	440	630	267	510
6140 45	450	380	660	225	540
6141 45	450	380	660	225	540
6140 39	390	330	680	195	560
6141 39	390	330	680	195	560
6140 34	345	280	695	170	575
6141 34	345	280	695	170	575

61404501

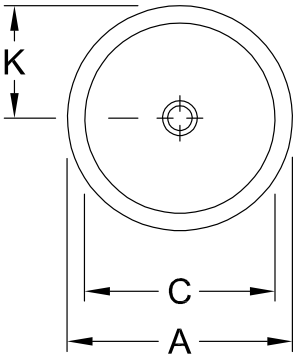

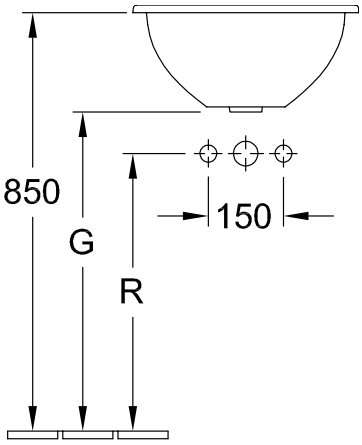

	A	C	G	K	R
6140 51	535	440	630	267	510
6141 51	535	440	630	267	510
6140 45	450	380	660	225	540
6141 45	450	380	660	225	540
6140 39	390	330	680	195	560
6141 39	390	330	680	195	560
6140 34	345	280	695	170	575
6141 34	345	280	695	170	575

61404501

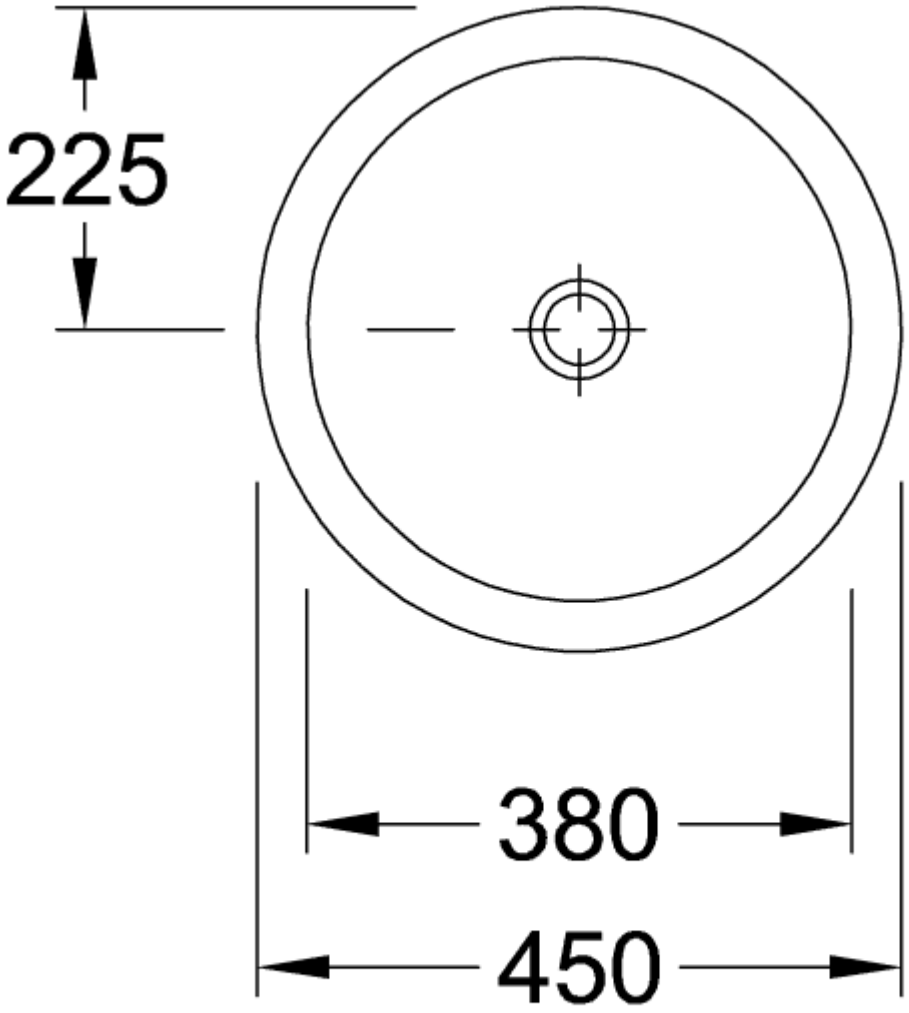
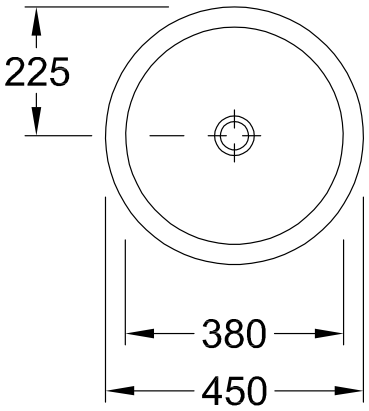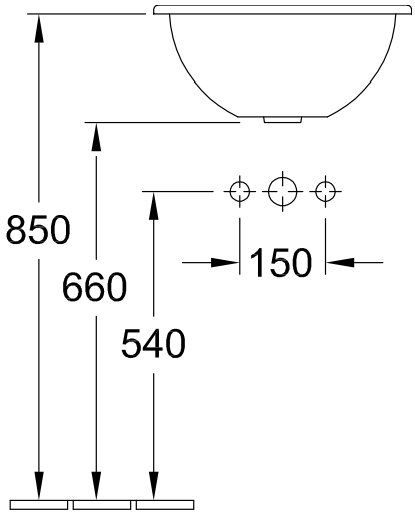
61404501