HOMMAGE PEDESTAL

PRODUCT INFORMATION

Article title	Villeroy & Boch Hommage Pedestal, 245 x 200 x 690 mm, White Alpin CeramicPlus
Article number	723200R1
Scope of delivery	1 x pedestal
Depth in mm	200
Width in mm	245
Height in mm	690
Collection	Hommage
Material	Sanitary ceramics
Colour name	White Alpin CeramicPlus
Colour designation	White Alpin

TECHNICAL DRAWINGS

723200R1

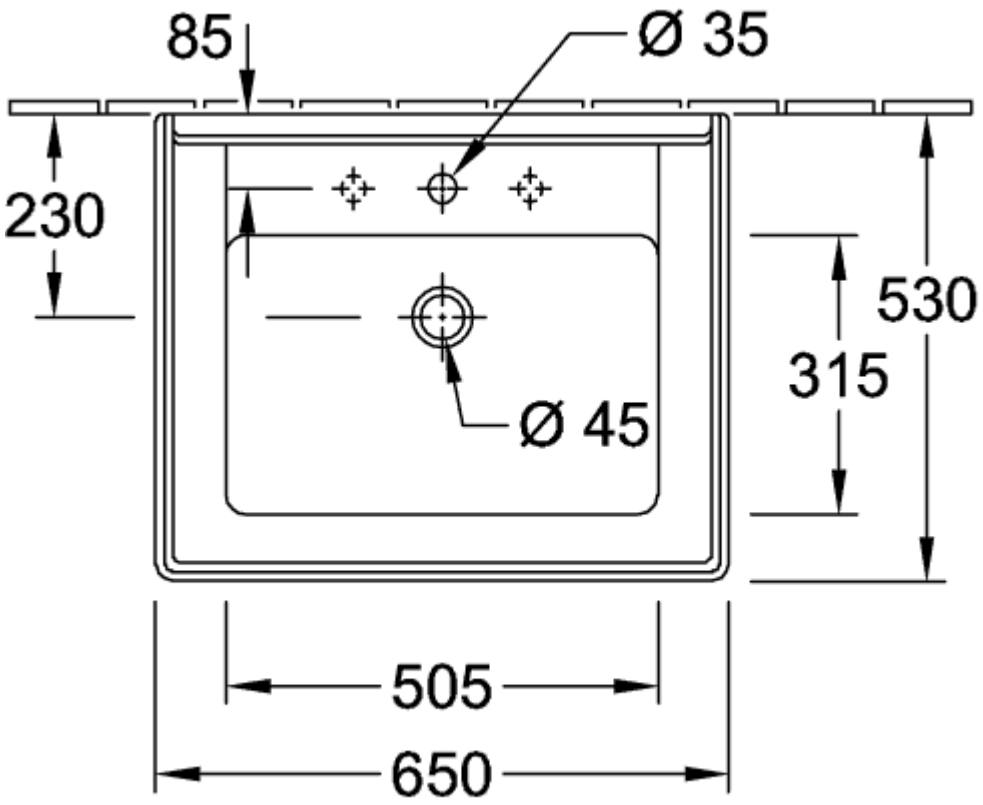
85
Ø 35
230
530
315
Ø 45
505
650

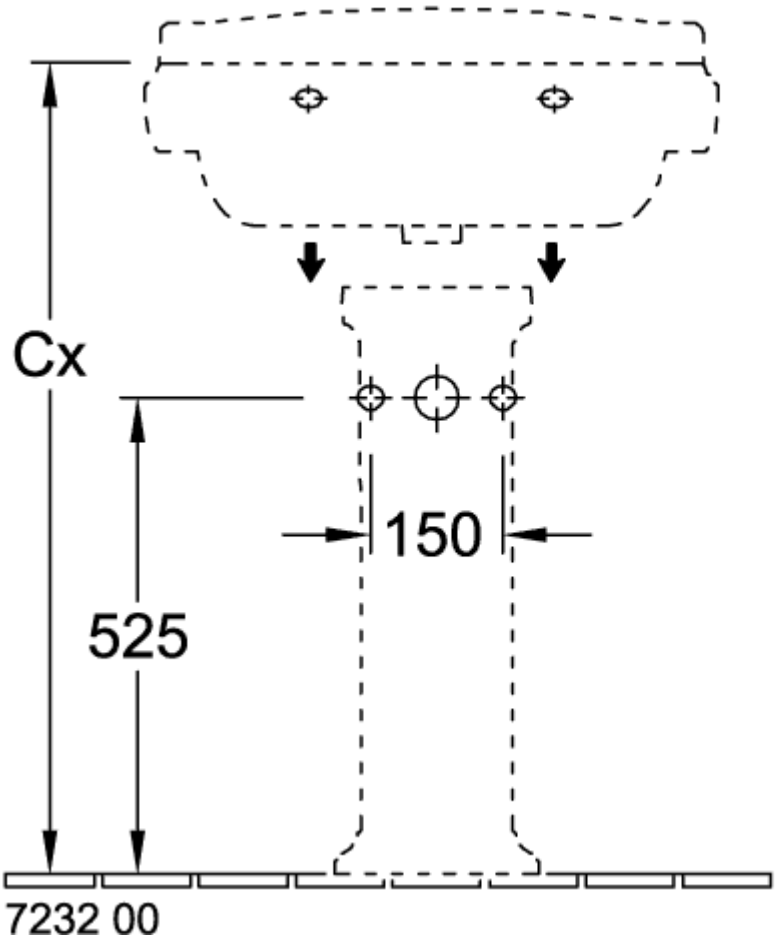
Cx
150
525
7232 00

723200R1

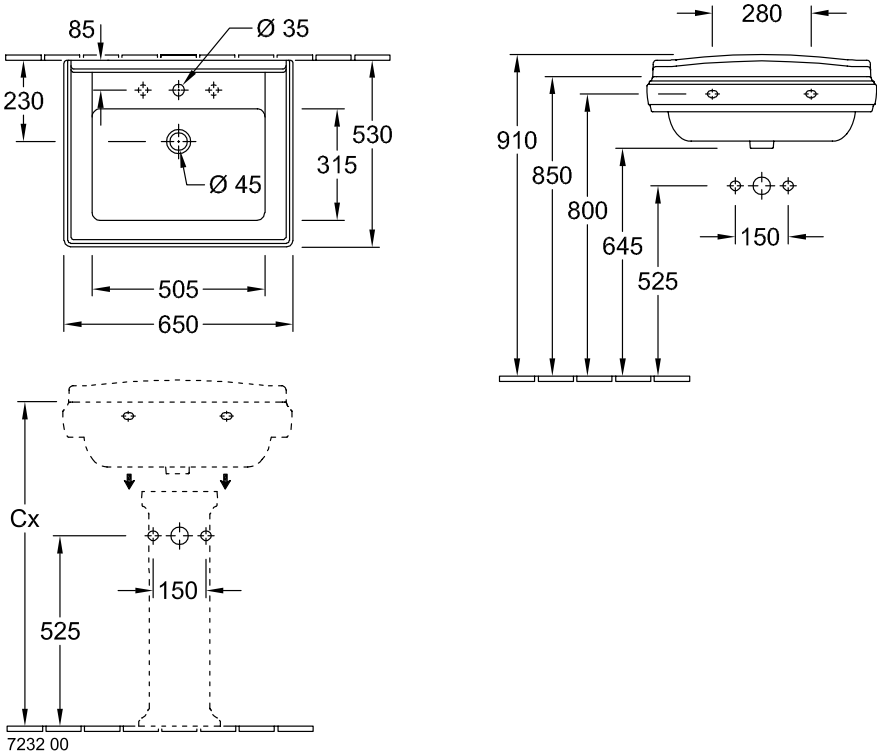
85
Ø 35
230
530
315
Ø 45
505
650
280
910
850
800
645
525
150
Cx
150
525
7232 00

723200R1

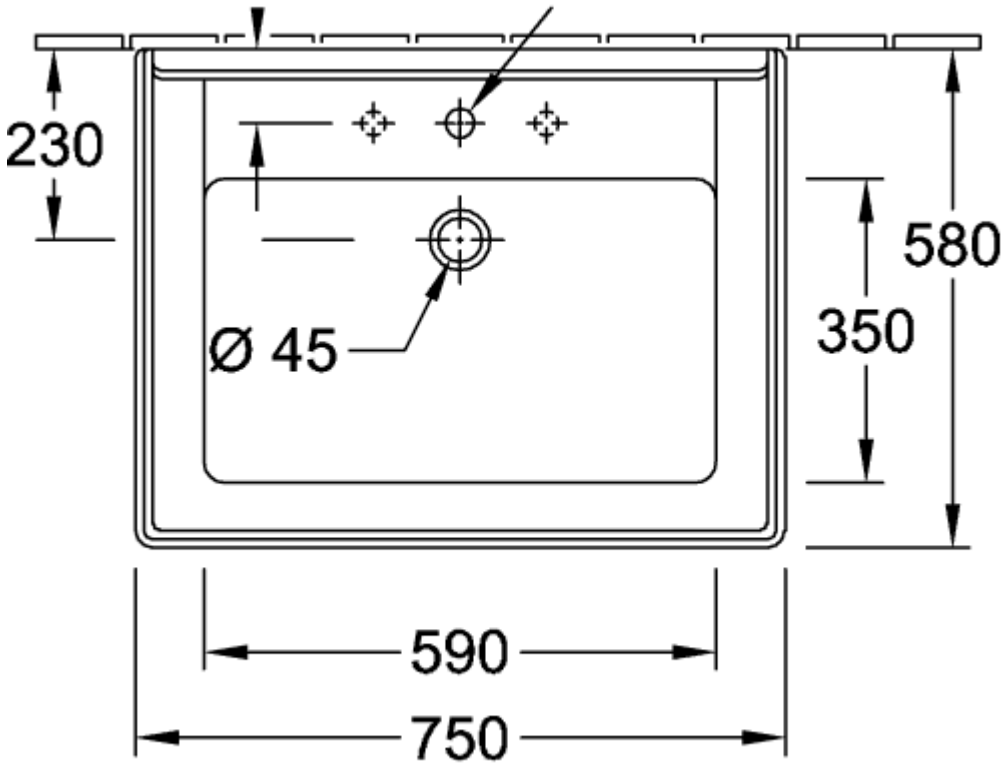
230
580
350
Ø 45
590
750

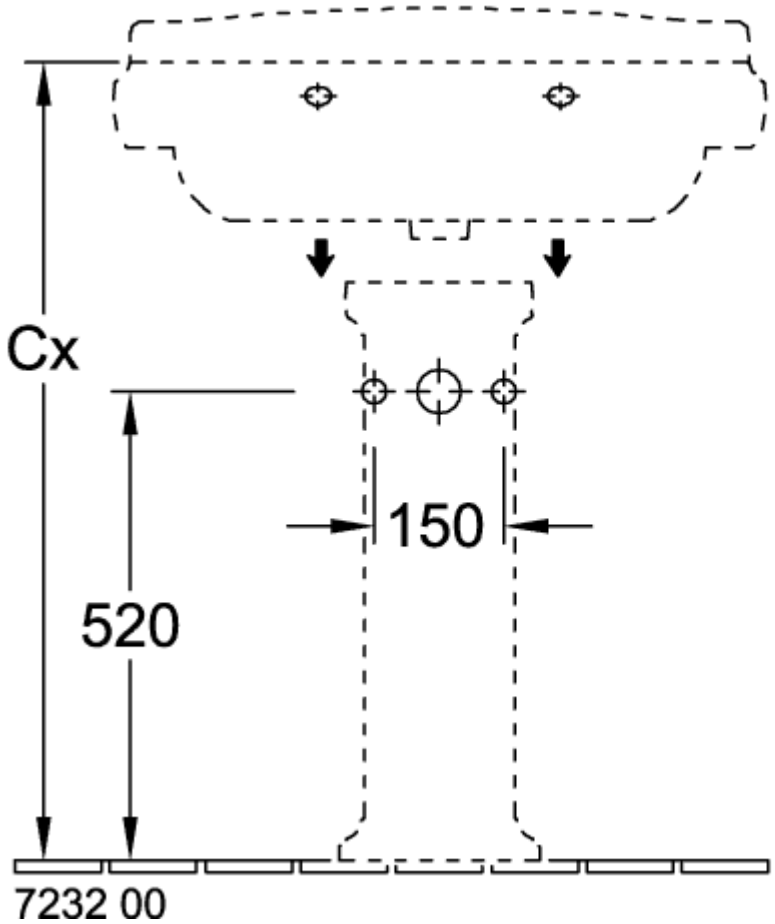
Cx
150
520
7232 00

723200R1

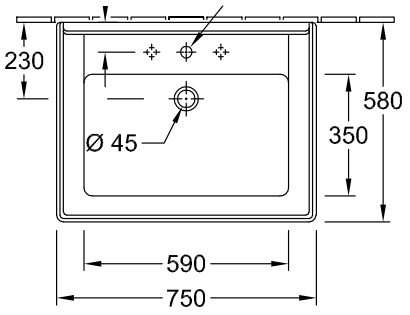
230
580
350
Ø 45
590
750

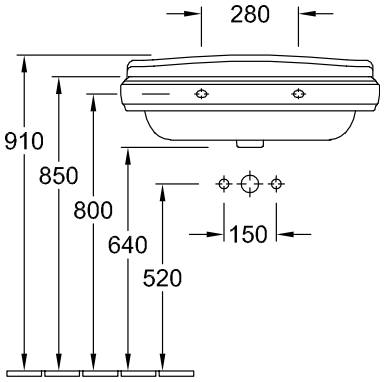
280
910
850
800
640
520
150

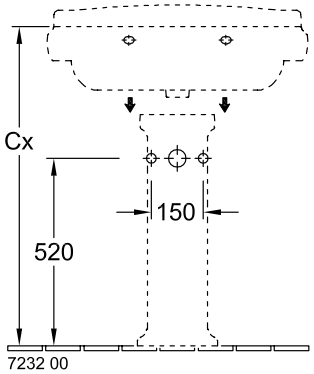
Cx
150
520
7232 00