LOOP & FRIENDS FREE-STANDING BATH FREE-STANDING

PRODUCT INFORMATION

Article title	Villeroy & Boch Loop & Friends Free-standing bath OVAL ColourOnDemand, 1800 x 800 mm, Colour On Demand
Article number	UBA180LFO7PDBCV-01
Assembly / Assembly type	freestanding
Scope of delivery	1 x free-standing bath , 1 x extended outlet and overflow (chrome-plated)
Length in mm	1800
Width in mm	800
Height in mm	465
Interior depth	440
Collection	Loop & Friends
Material	Acrylic
Colour name	Colour On Demand
Other material	Waste/overflow combination: Plastic Outlet cover: Plastic Interior colour: Acrylic
Other surfaces	Waste/overflow combination: glossy, Outlet cover: glossy Interior colour: glossy
With overflow	Yes
Number of people	2
Shape	Free-standing
Colour designation	Colour On Demand
Other colour designations	Waste/overflow combination: Chrome, Outlet cover: Chrome Interior colour: White Alpin
With slip resistance	No
Outlet / outlet	central outlet
Interior form	oval
SilentFlow	No

TECHNICAL DRAWINGS

UBA180LFO7PDBCV-01

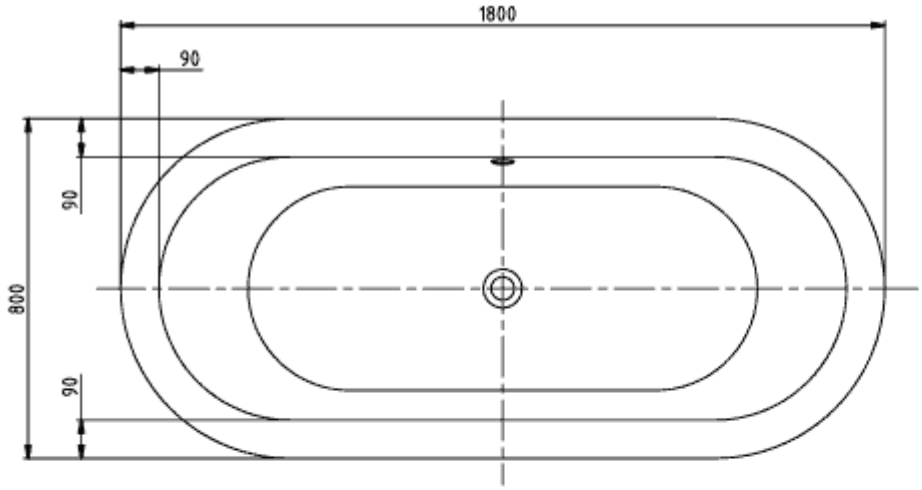

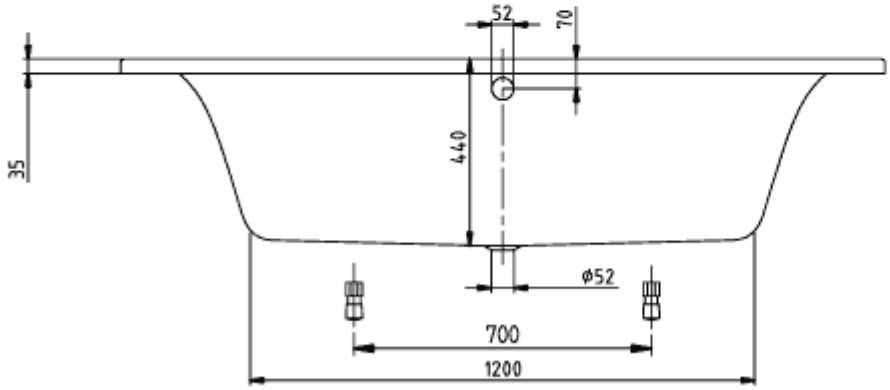

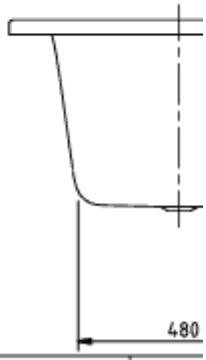

LOOP & FRIENDS OVAL 1800x800 UBA180LFO7	Viller
V02/ 25-02-2020	

UBA180LFO7PDBCV-01

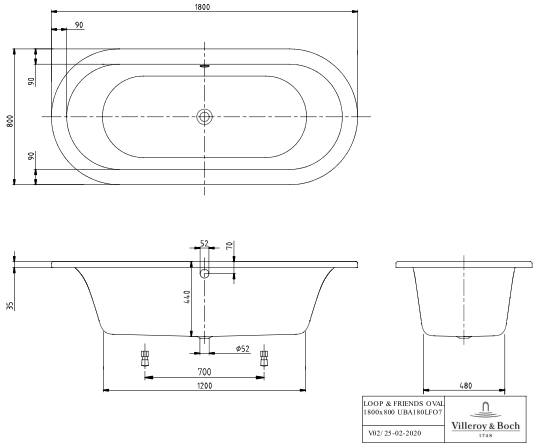

UBA180LFO7PDBCV-01

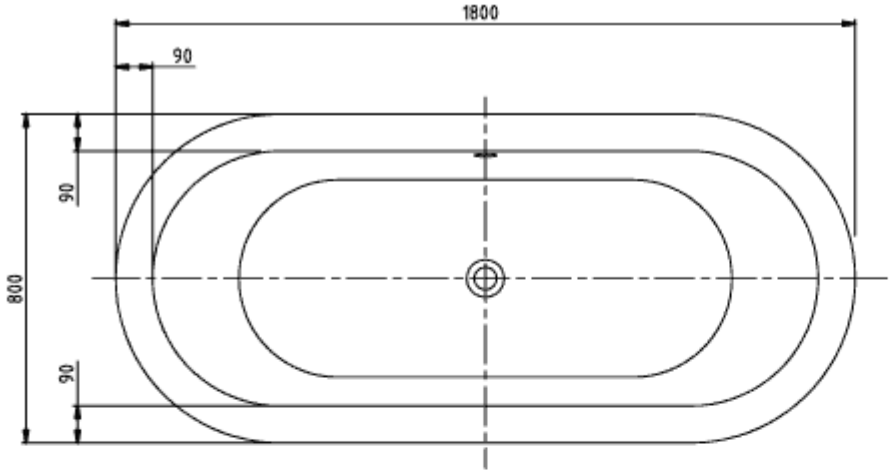

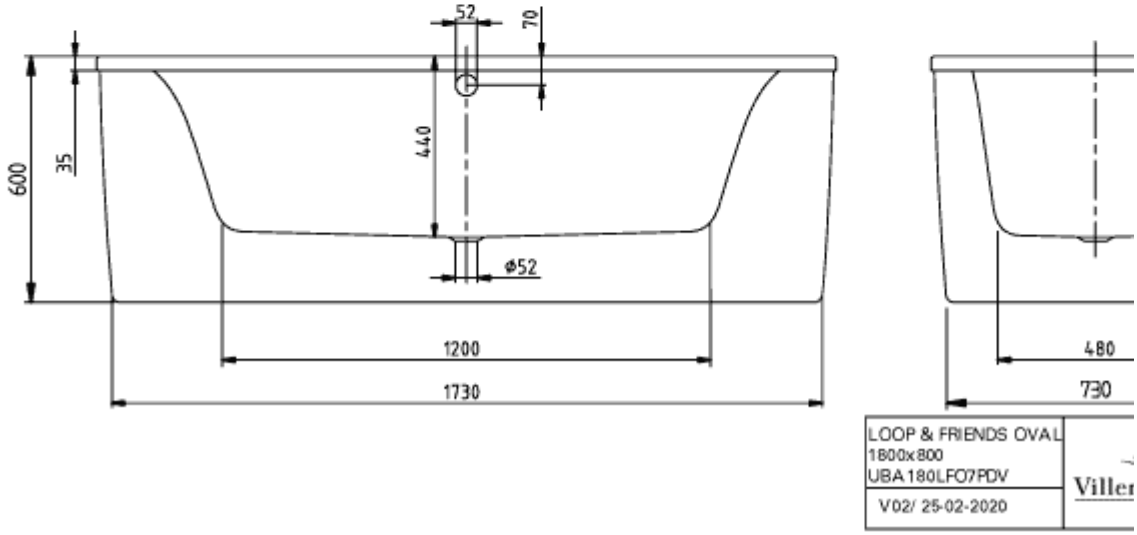
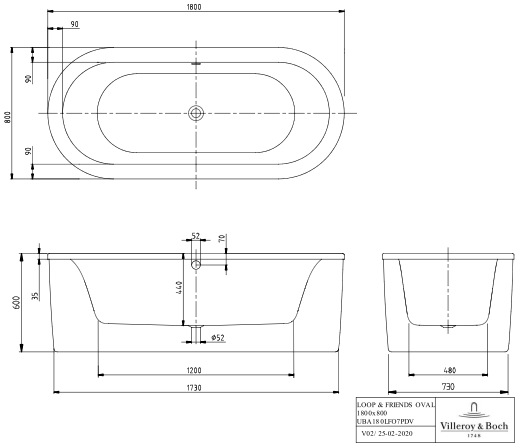
UBA180LFO7PDBCV-01