SUBWAY 60 XU UNDERCOUNTER SINK RECTANGLE

PRODUCT INFORMATION

Article title	Villeroy & Boch Subway 60 XU Undercounter sink, included Waste system hand-operated, of Ceramic, 545 x 440 mm, White Alpin CeramicPlus
Article number	675801R1
Assembly / Assembly type	Undercounter
Assembly instructions	Installation in natural stone or artificial stone countertops, minimum unit width: 60 cm
Scope of delivery	1 x sink , 1 x basket strainer waste
Length in mm	440
Width in mm	545
Height in mm	200
Interior depth	190
Collection	Subway 60 XU
Material	Ceramic
Colour name	White Alpin CeramicPlus
Other material	Grate: Stainless steel Valve: Stainless steel
Position of main bowl	Basin on right
Function of the drain fitting	basket strainer waste
Colour designation	White Alpin
Other colour designations	Grate: Chrome, Valve: Chrome

TECHNICAL DRAWINGS

675801R1

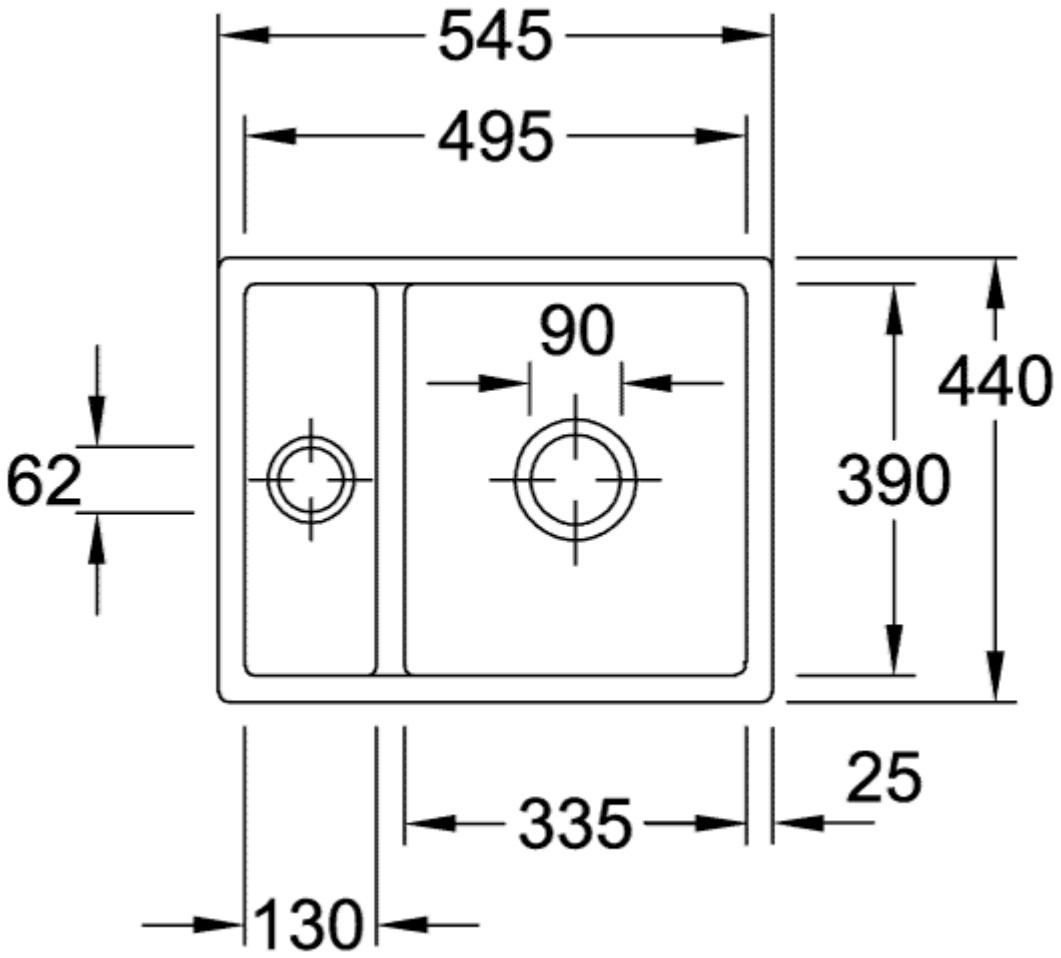
545
495
90
440
62
390
25
335
130

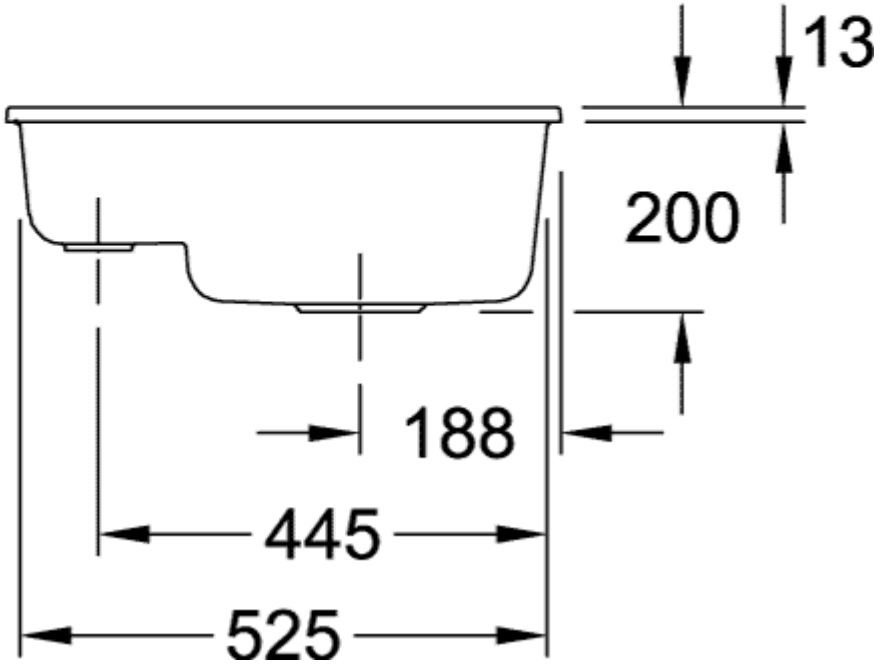
13
200
188
445
525
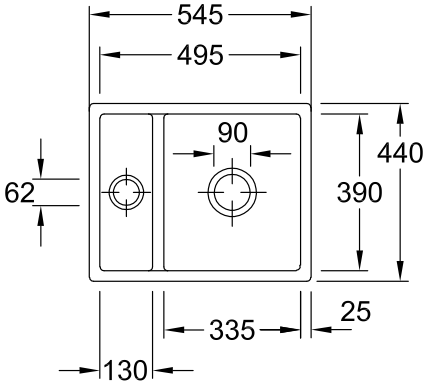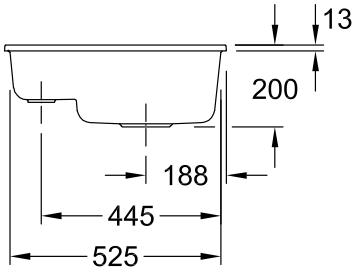
675801R1