TIMELINE 45 BUILT-IN SINK RECTANGLE

PRODUCT INFORMATION

Article title	Villeroy & Boch Timeline 45 Built-in sink, included Waste system pop-up, White alpin glossy
Article number	67910201
Assembly / Assembly type	surface-mounted installation
Assembly instructions	minimum unit width: 45 cm
Scope of delivery	1 x sink , 1 x pop-up waste system 1 x cover cap, round
Interior depth	202
Collection	Timeline 45
Colour name	White alpin glossy
Position of main bowl	Basin, reversible
Function of the drain fitting	pop-up waste system
Colour designation	White Alpin

TECHNICAL DRAWINGS

67910201

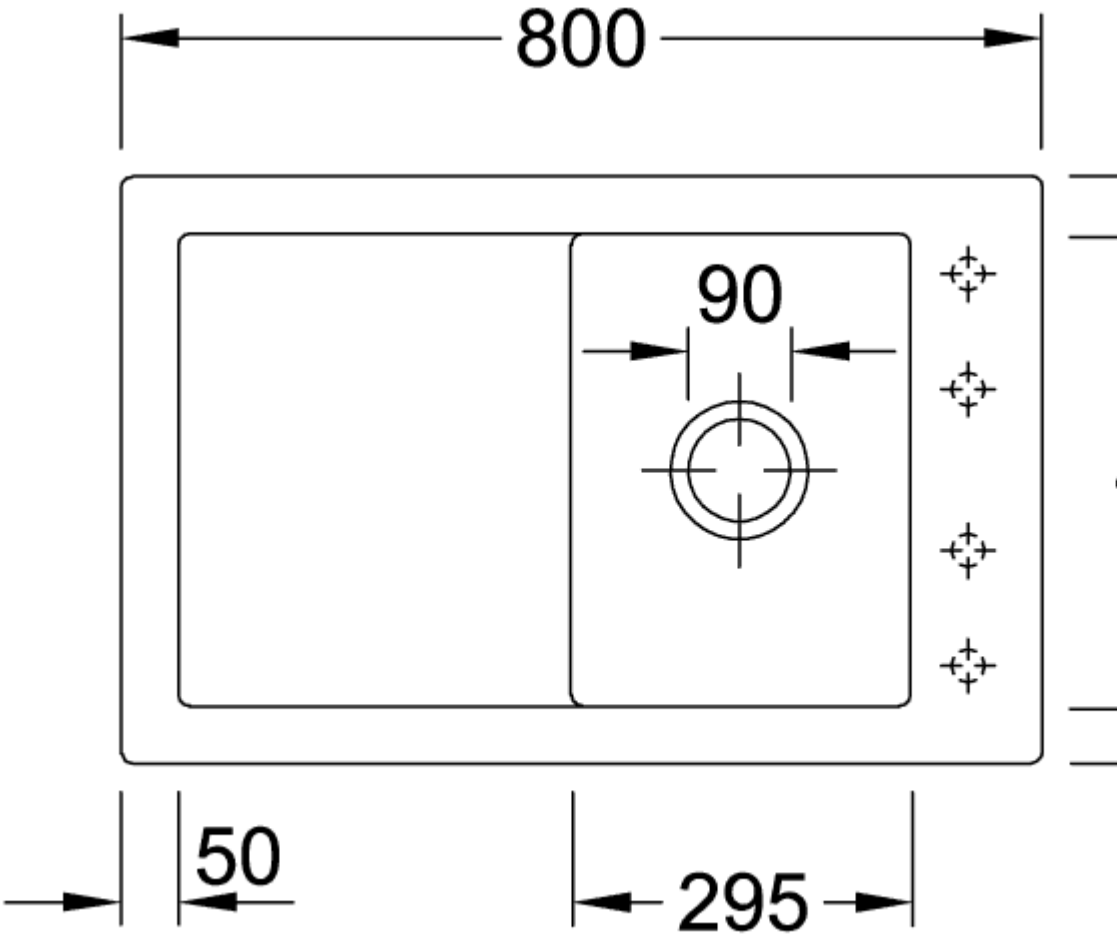
800
90
50
295

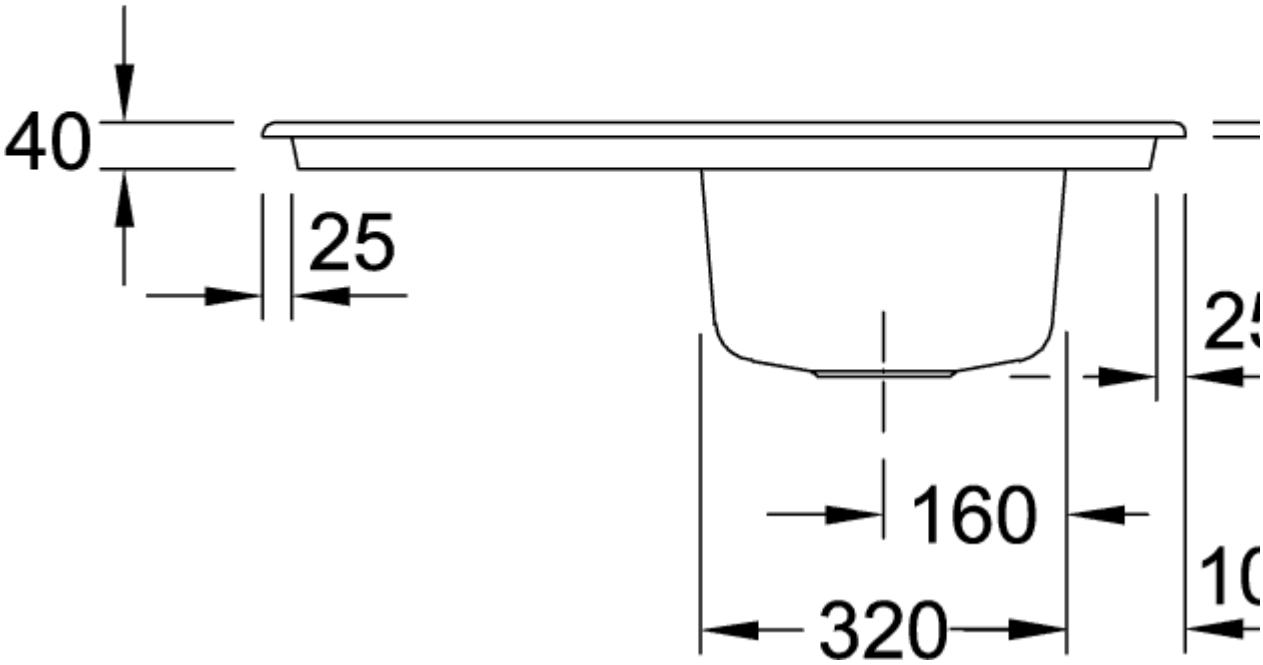
40
25
160
320
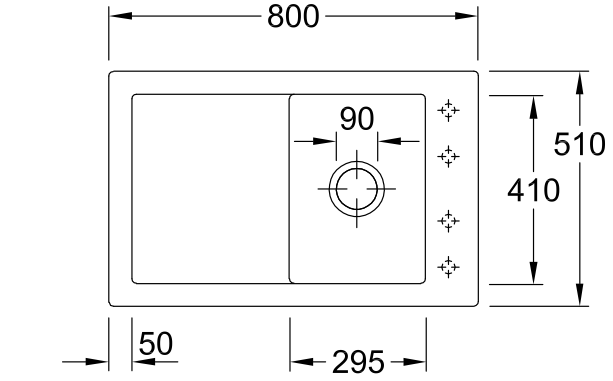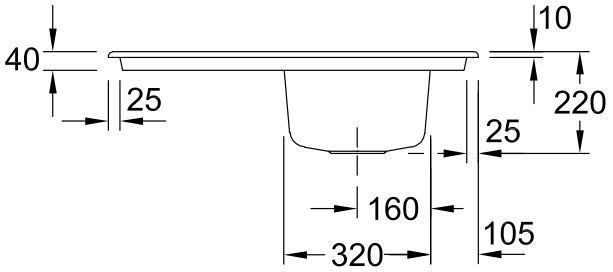
67910201