SILUET 45 BUILT-IN SINK RECTANGLE

PRODUCT INFORMATION

Article title	Villeroy & Boch Siluet 45 Built-in sink, included Waste system pop-up, of TitanCeram, 800 x 510 mm, Almond CeramicPlus
Article number	333402AM
Assembly / Assembly type	surface-mounted installation
Assembly instructions	minimum unit width: 45 cm
Scope of delivery	1 x sink , 1 x pop-up waste system 1 x cover cap, round
Length in mm	510
Width in mm	800
Height in mm	220
Interior depth	200
Collection	Siluet 45
Material	TitanCeram
Colour name	Almond CeramicPlus
Other material	Grate: Stainless steel Valve: Stainless steel
Design Awards	KitchenInnovation of the Year® 2018
Position of main bowl	Basin, reversible
Function of the drain fitting	pop-up waste system
Colour designation	Almond
Other colour designations	Grate: Chrome, Valve: Chrome

TECHNICAL DRAWINGS

333402AM

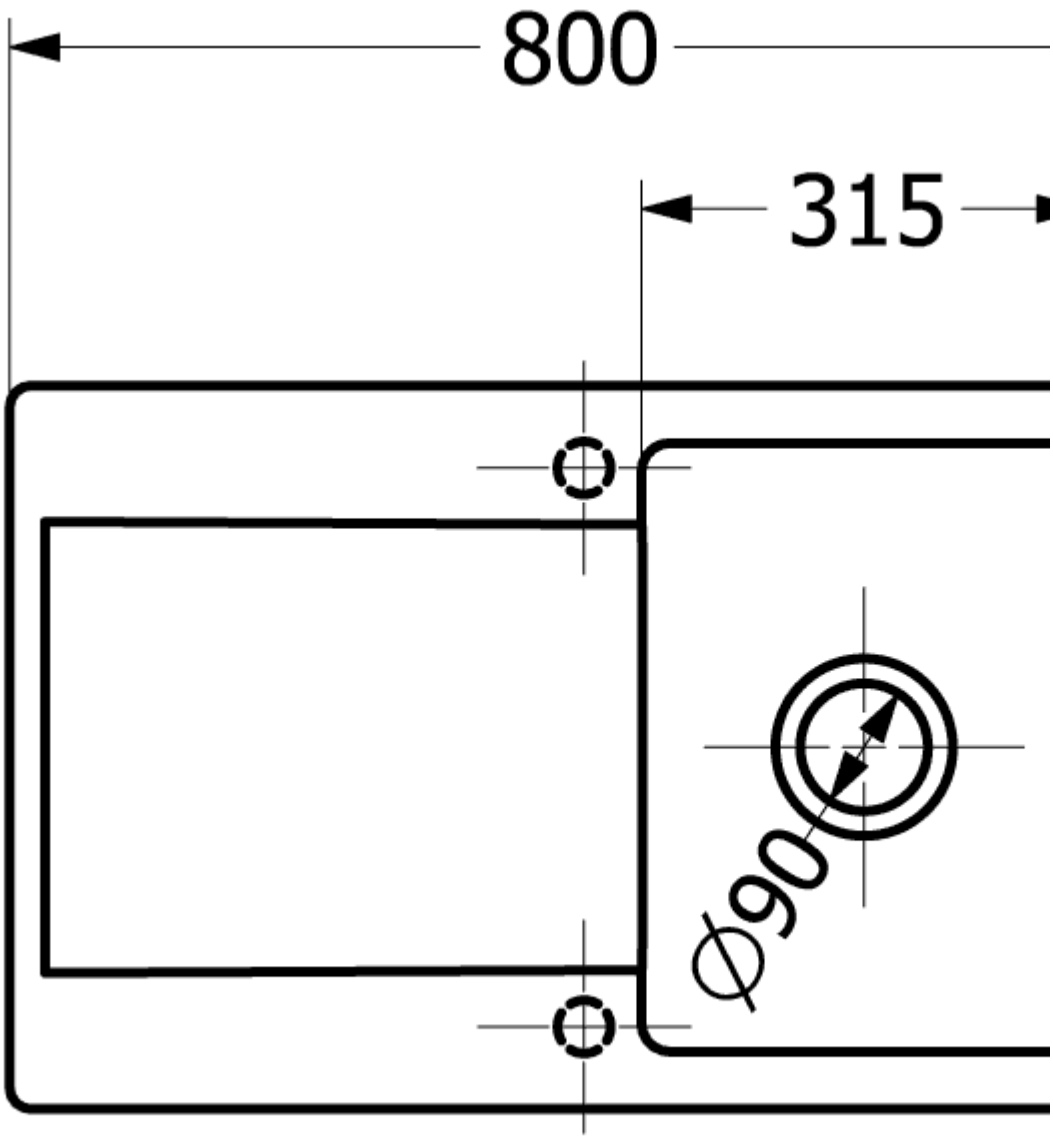
800
315
Ø90

30
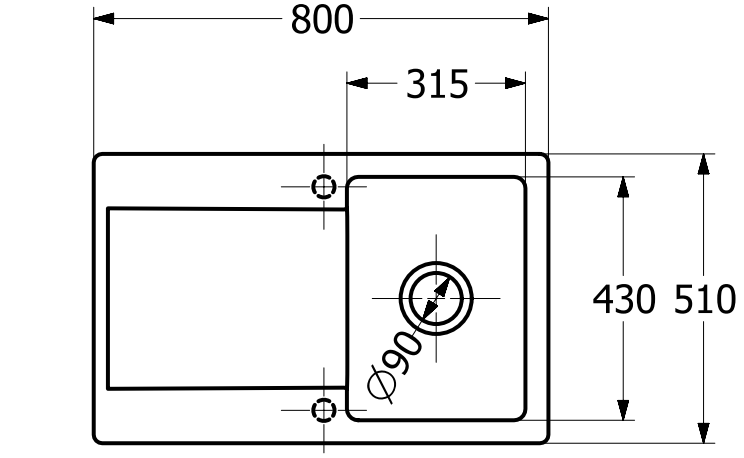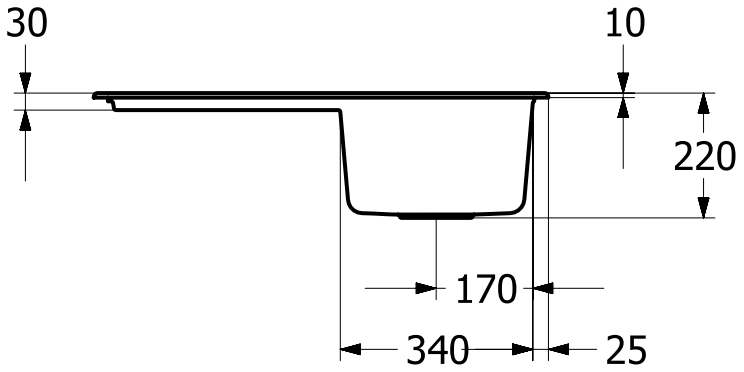
333402AM