SILUET 60 R FLAT FLUSH-MOUNTED SINK RECTANGLE

PRODUCT INFORMATION

Article title	Villeroy & Boch Siluet 60 R flat Flush-mounted sink, included Waste system pop-up, of TitanCeram, 980 x 490 mm, White Alpin CeramicPlus
Article number	33372FR1
Assembly / Assembly type	flush-fitting installation
Assembly instructions	minimum unit width: 60 cm, Minimum thickness of the countertop when placed with a dishwasher: at least 3 cm|For flush-fit installation in natural stone or artificial stone countertops
Scope of delivery	1 x sink , 1 x pop-up waste system 1 x cover cap, round
Length in mm	490
Width in mm	980
Height in mm	220
Interior depth	200
Collection	Siluet 60 R flat
Material	TitanCeram
Colour name	White Alpin CeramicPlus
Other material	Grate: Stainless steel Valve: Stainless steel
Position of main bowl	Basin, reversible
Function of the drain fitting	pop-up waste system
Colour designation	White Alpin
Other colour designations	Grate: Chrome, Valve: Chrome

TECHNICAL DRAWINGS

33372FR1

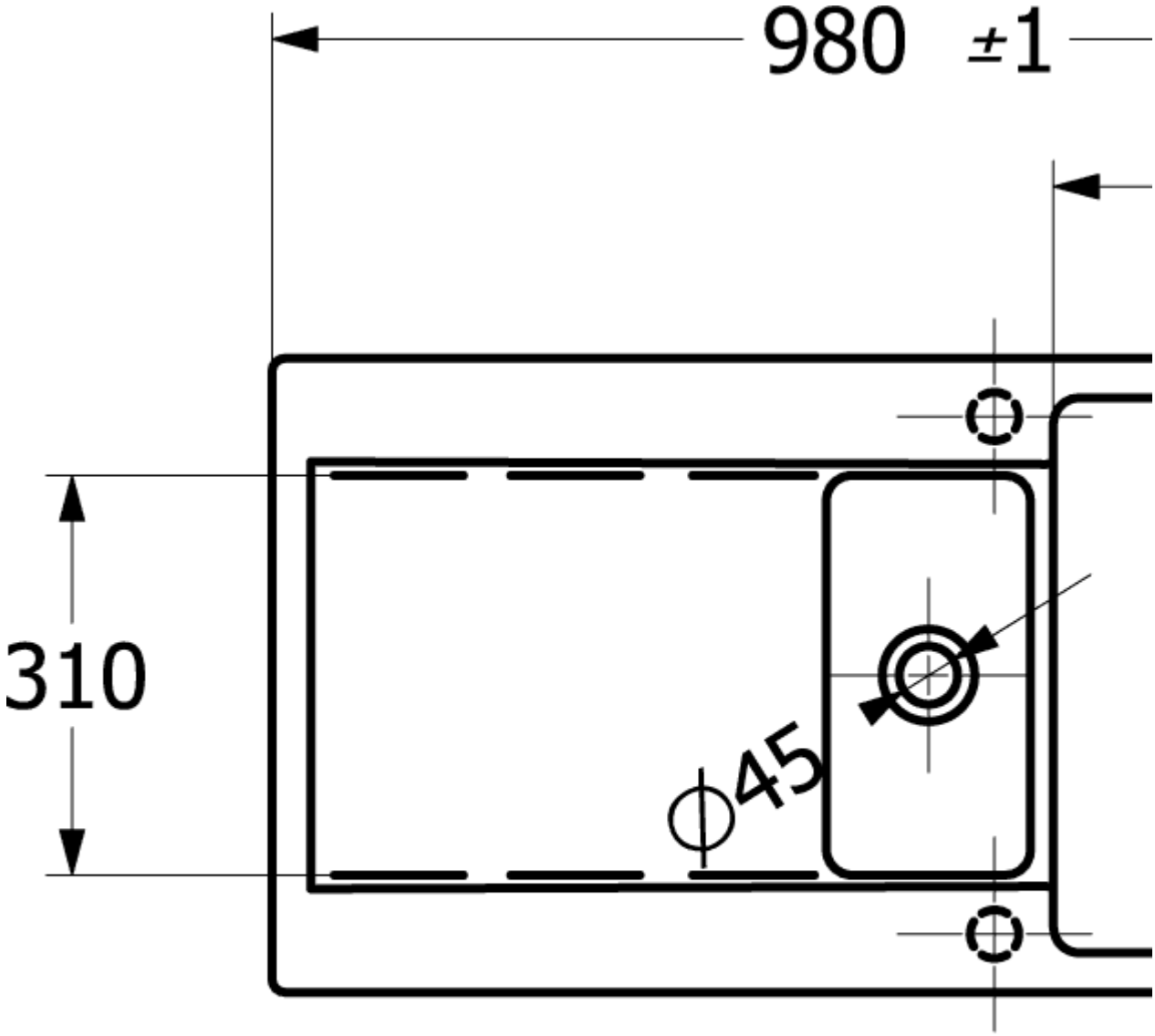
980 ±1
310
ϕ45

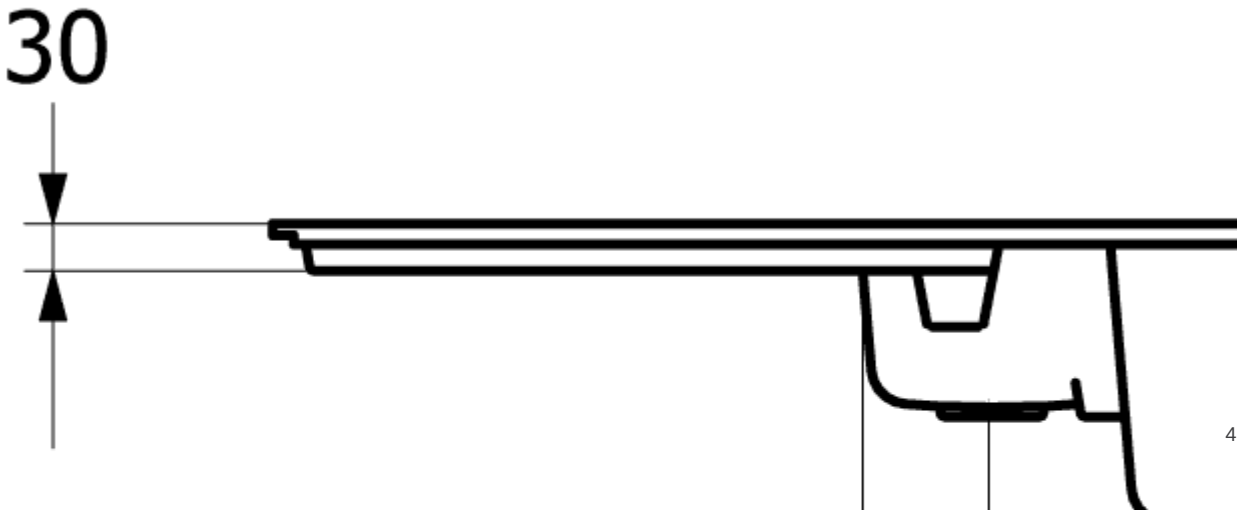
30
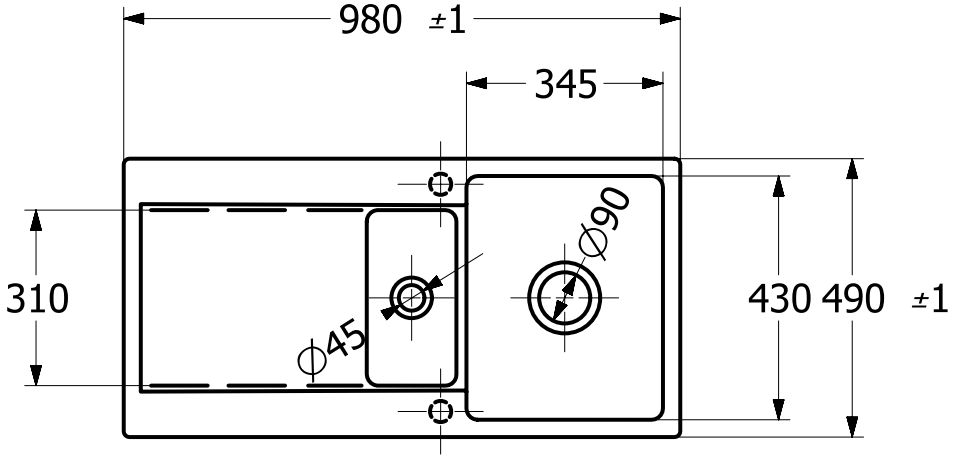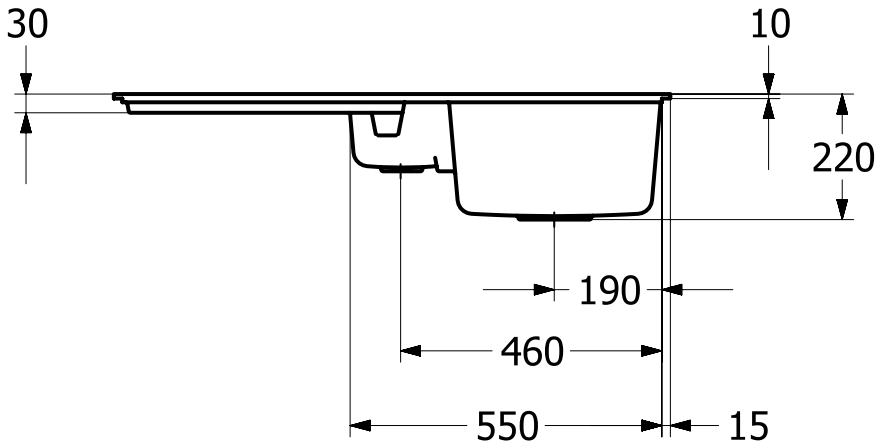
33372FR1