SILUET 50 S BUILT-IN SINK RECTANGLE

PRODUCT INFORMATION

Article title	Villeroy & Boch Siluet 50 S Built-in sink, included Waste system pop-up, of TitanCeram, 510 x 510 mm, White Alpin CeramicPlus
Article number	334502R1
Assembly / Assembly type	surface-mounted installation
Assembly instructions	minimum unit width: 50 cm
Scope of delivery	1 x sink , 1 x pop-up waste system 1 x cover cap, round
Length in mm	510
Width in mm	510
Height in mm	220
Interior depth	200
Collection	Siluet 50 S
Material	TitanCeram
Colour name	White Alpin CeramicPlus
Other material	Grate: Stainless steel Valve: Stainless steel
Design Awards	KitchenInnovation of the Year® 2018
Function of the drain fitting	pop-up waste system
Colour designation	White Alpin
Other colour designations	Grate: Chrome, Valve: Chrome

TECHNICAL DRAWINGS

334502R1

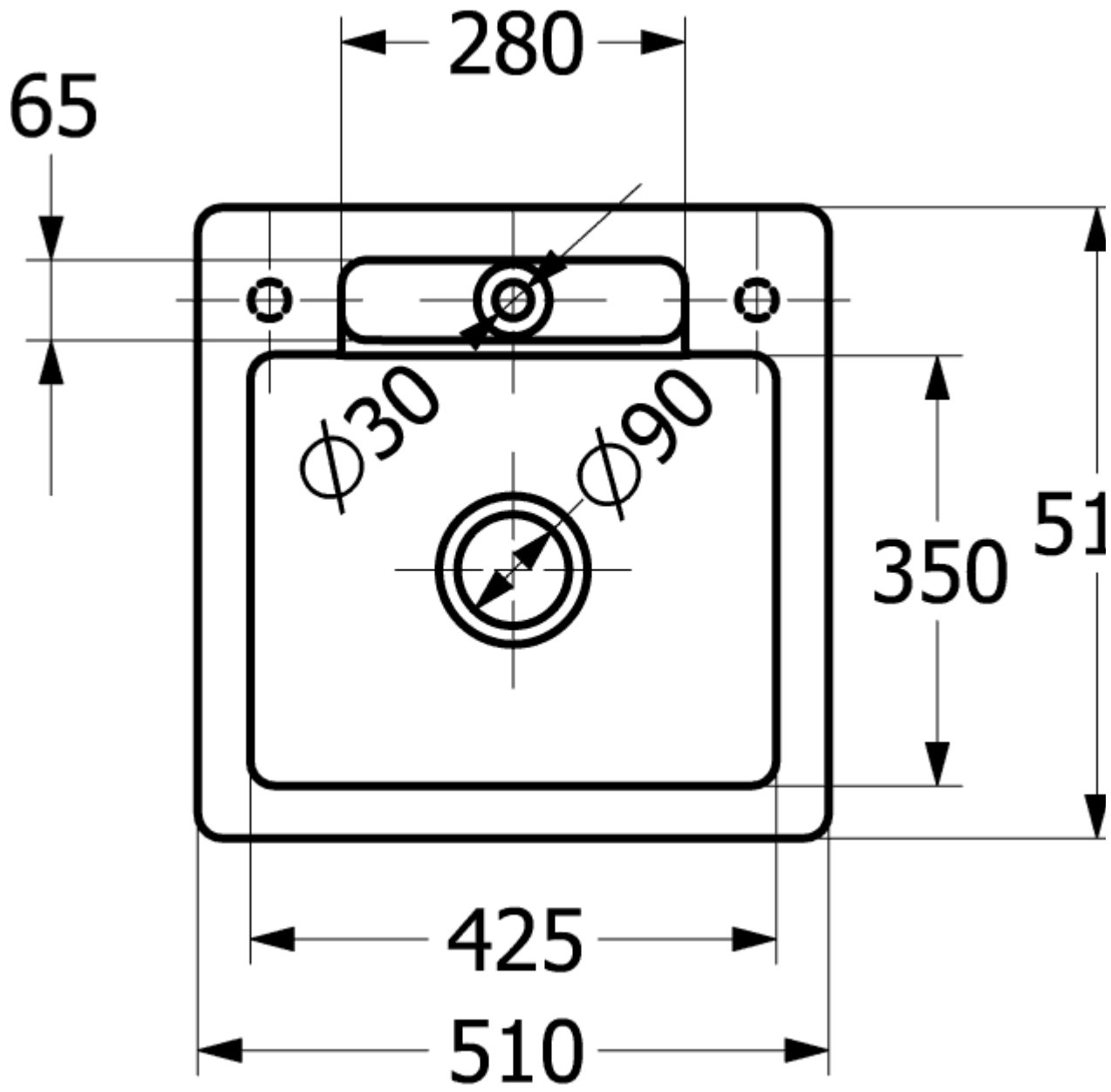
280
65
Ø30
Ø90
350
51
425
510

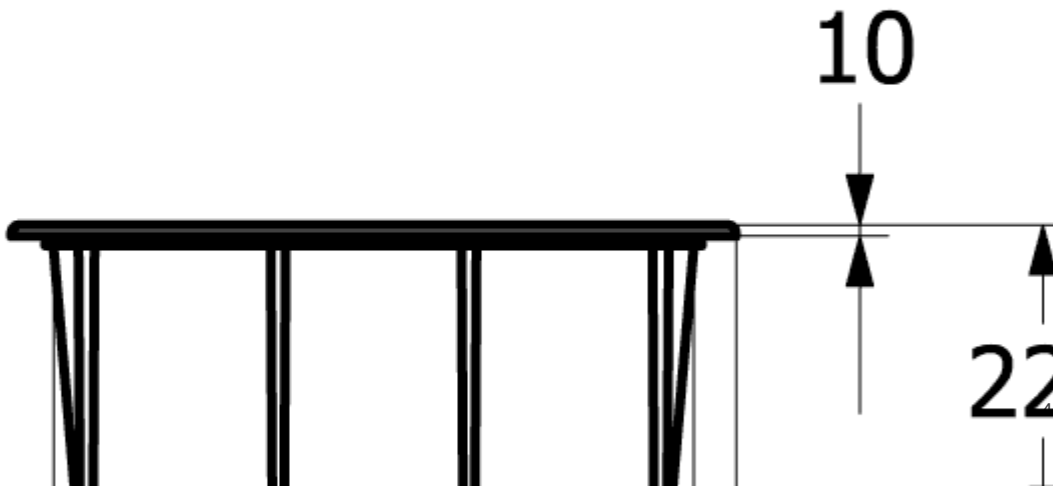
10
22
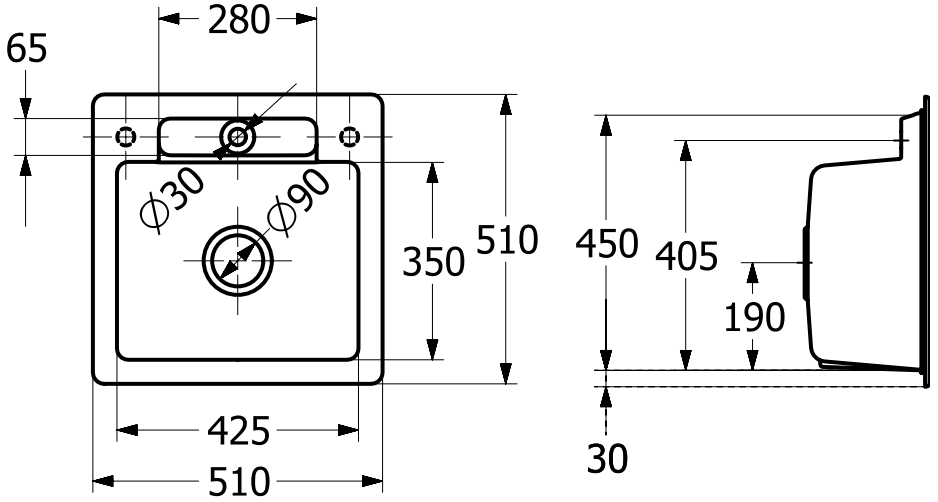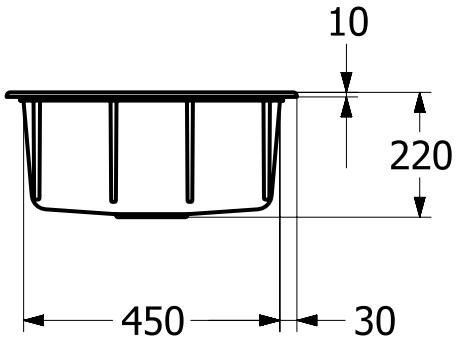
334502R1