TIMELINE 60 BUILT-IN SINK RECTANGLE

PRODUCT INFORMATION

Article title	Villeroy & Boch Timeline 60 Built-in sink, included Waste system hand-operated
Article number	679001H9
Assembly / Assembly type	surface-mounted installation
Assembly instructions	minimum unit width: 60 cm
Scope of delivery	1 x sink , 1 x basket strainer waste
Interior depth	202
Collection	Timeline 60
Position of main bowl	Basin, reversible
Function of the drain fitting	basket strainer waste

TECHNICAL DRAWINGS

679001H9

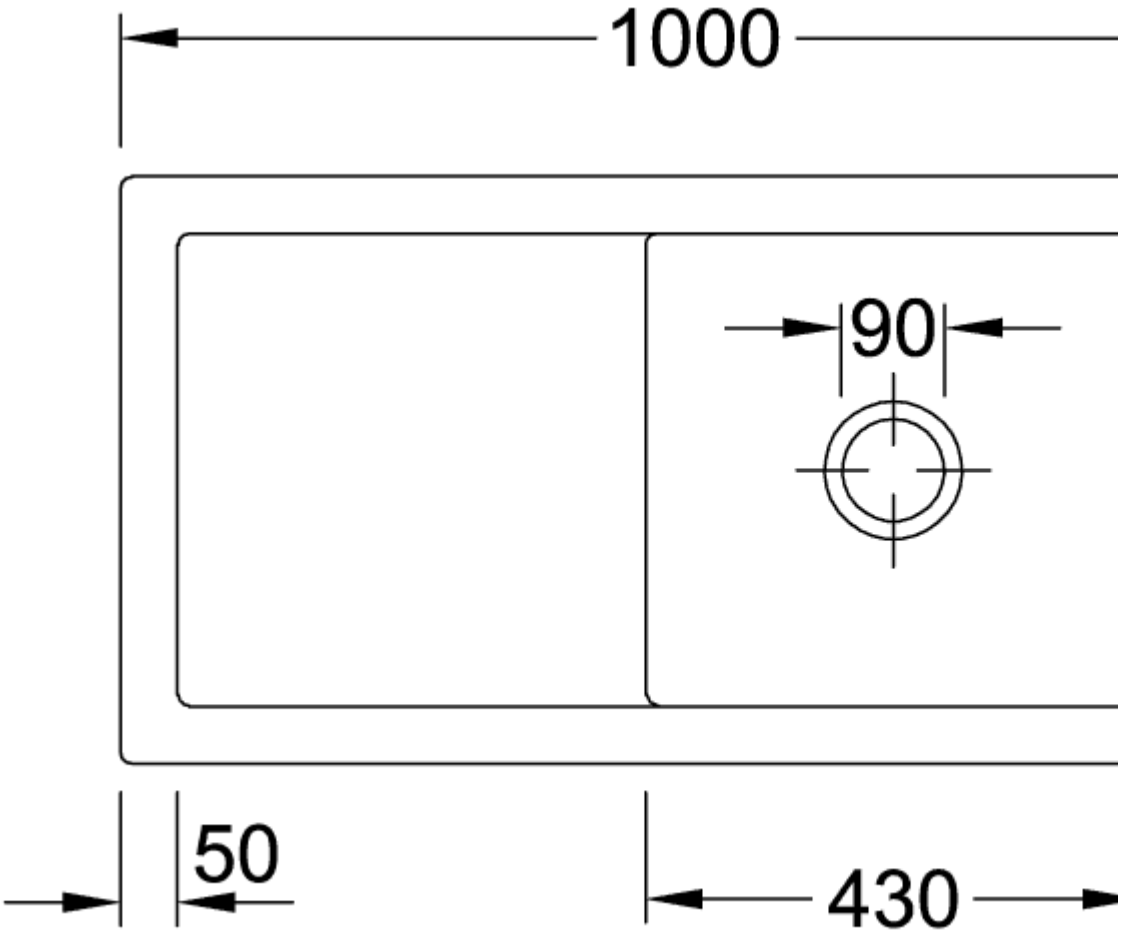
1000
90
50
430

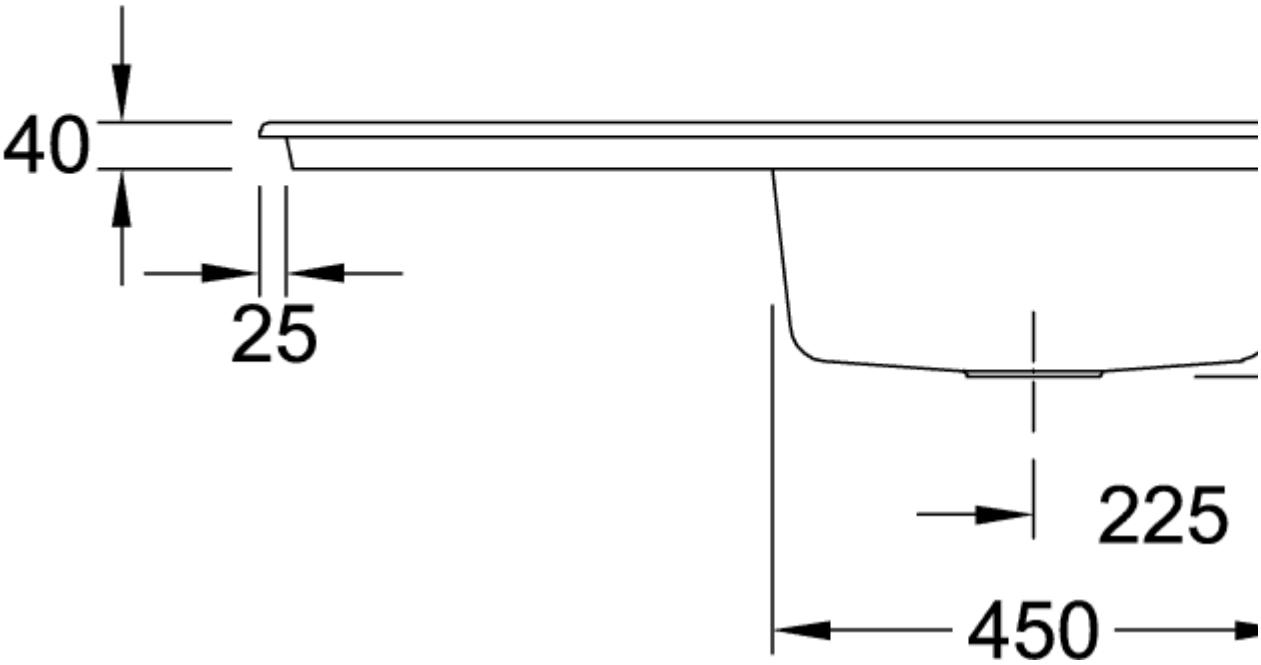
40
25
225
450
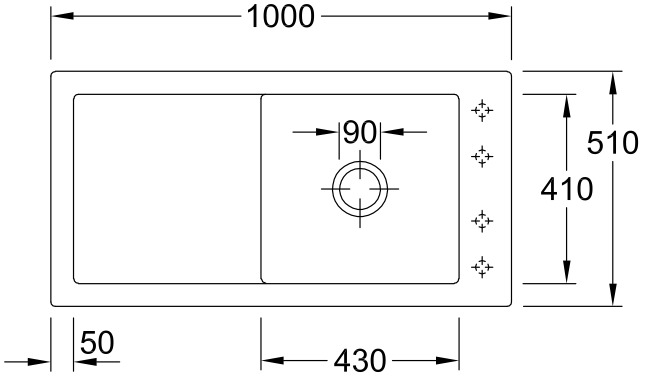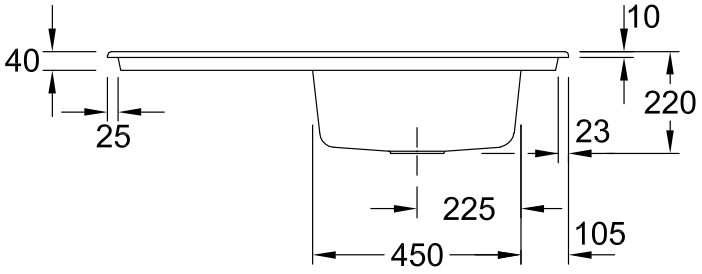
679001H9