TIMELINE 60 BUILT-IN SINK RECTANGLE

PRODUCT INFORMATION

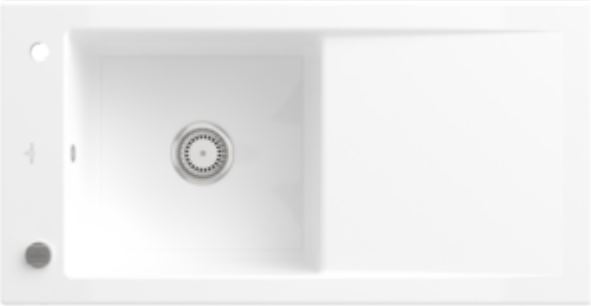

Article title	Villeroy & Boch Timeline 60 Built-in sink, included Waste system pop-up, of Ceramic, 1000 x 510 mm, White Alpin CeramicPlus
Article number	679002R1
Assembly / Assembly type	surface-mounted installation
Assembly instructions	minimum unit width: 60 cm
Scope of delivery	1 x sink , 1 x pop-up waste system 1 x cover cap, round
Length in mm	510
Width in mm	1000
Height in mm	220
Interior depth	202
Collection	Timeline 60
Material	Ceramic
Colour name	White Alpin CeramicPlus
Other material	Grate: Stainless steel Valve: Stainless steel
Position of main bowl	Basin, reversible
Function of the drain fitting	pop-up waste system
Colour designation	White Alpin
Other colour designations	Grate: Chrome, Valve: Chrome

TECHNICAL DRAWINGS

679002R1

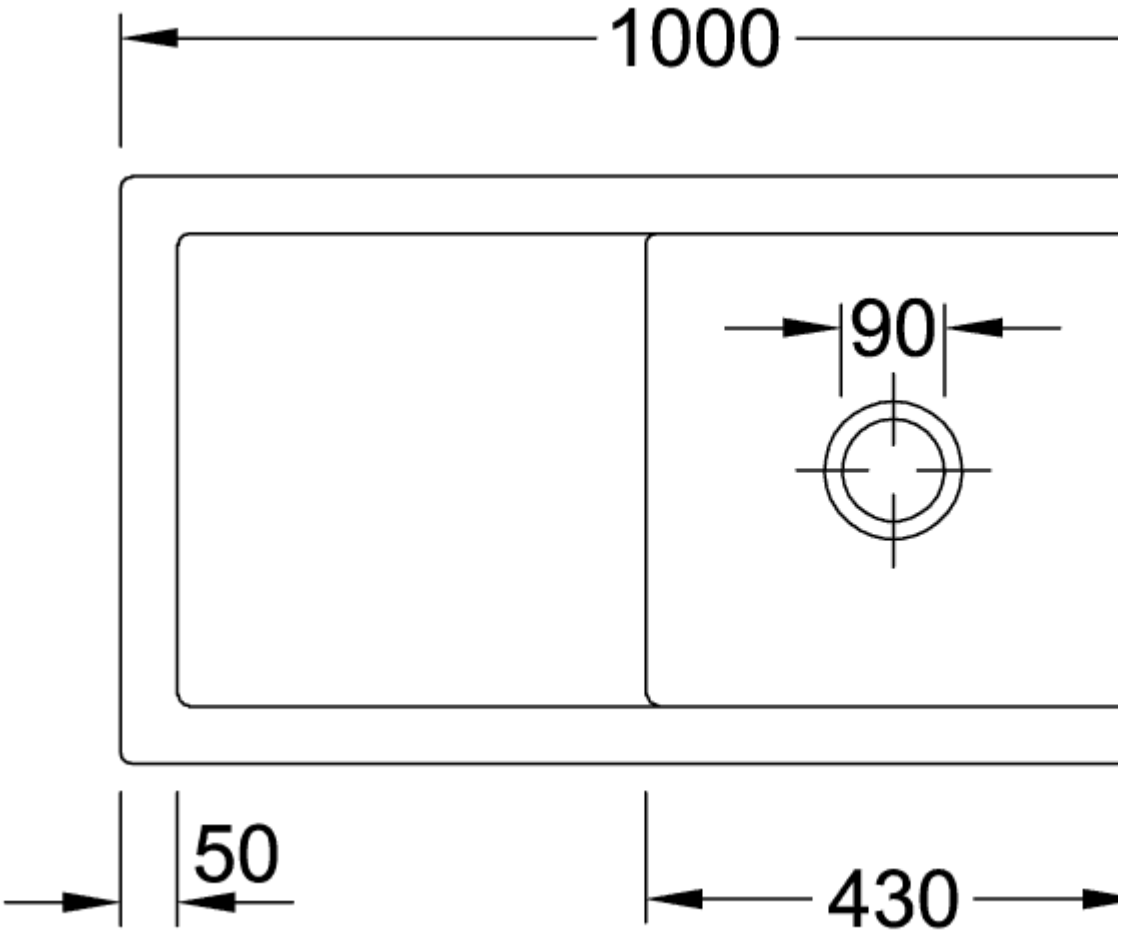
1000
90
50
430

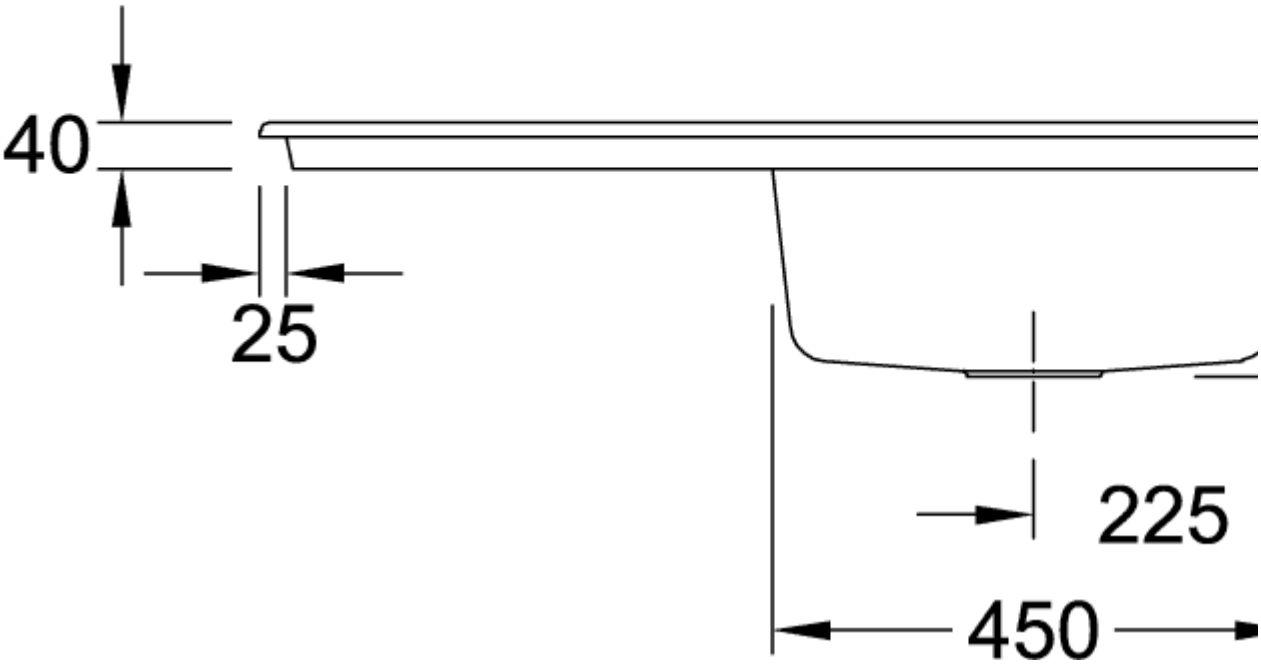
40
25
225
450
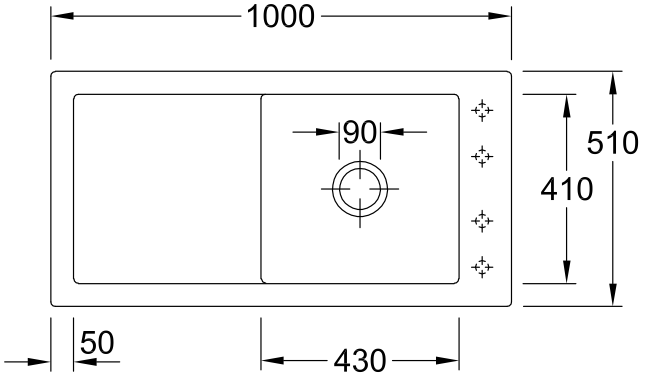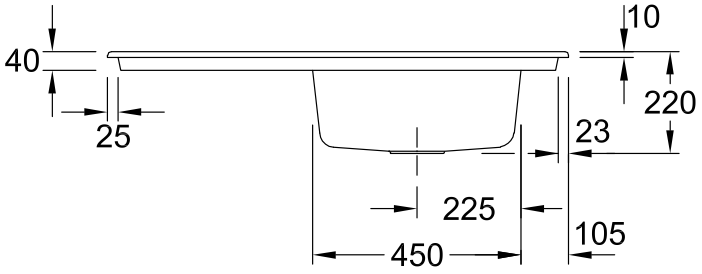
679002R1