FLAVIA 60 BUILT-IN SINK RECTANGLE

PRODUCT INFORMATION

Article title	Villeroy & Boch Flavia 60 Built-in sink, included Waste system hand-operated, of Ceramic, 1010 x 510 mm, White Alpin CeramicPlus
Article number	330401R1
Assembly / Assembly type	surface-mounted installation
Assembly instructions	minimum unit width: 60 cm
Scope of delivery	1 x sink , 1 x basket strainer waste
Length in mm	510
Width in mm	1010
Height in mm	220
Interior depth	200
Collection	Flavia 60
Material	Ceramic
Colour name	White Alpin CeramicPlus
Other material	Grate: Stainless steel Valve: Stainless steel
Position of main bowl	Basin, reversible
Function of the drain fitting	basket strainer waste
Colour designation	White Alpin
Other colour designations	Grate: Chrome, Valve: Chrome

TECHNICAL DRAWINGS

330401R1

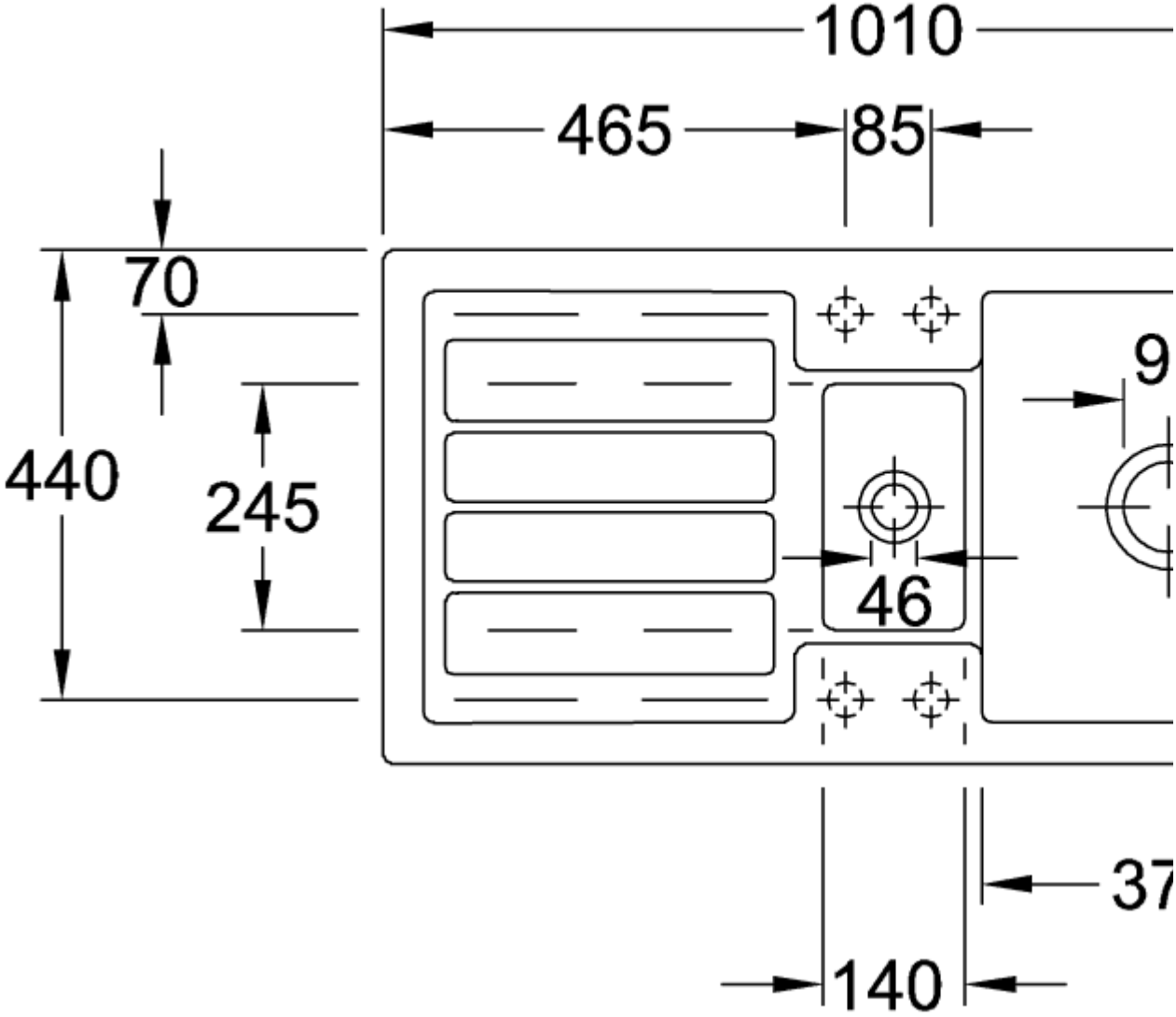
1010
465
85
70
440
245
9
46
37
140

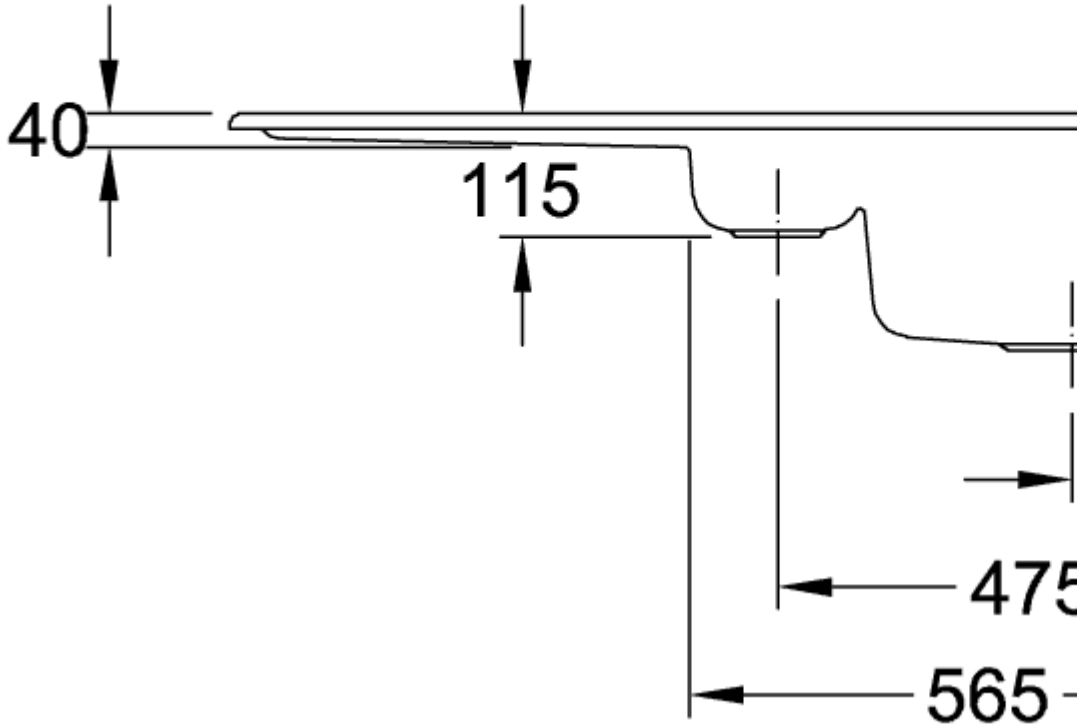
40
115
475
565

330401R1

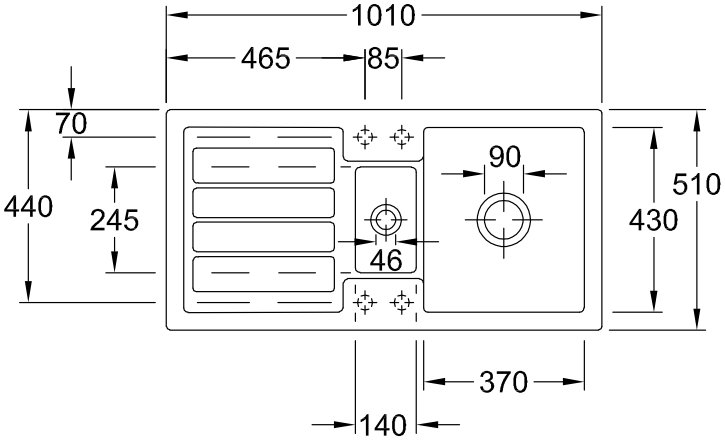
1010
465
85
70
440
245
90
46
510
430
370
140

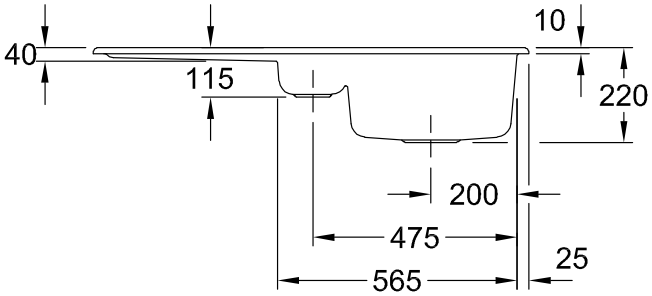
40
115
10
220
200
475
565
25